AIRBUS A350 EQUIPMENT CATALOGUE

A350 – 900 / – 1000

IN SAFE HANDS

WITH HYDRO YOU ARE IN SAFE HANDS!

With over half a century of experience in the aircraft industry and a strong passion for precision, we are the single source that can meet all of your requirements.
Our whole life cycle solutions are designed to perfectly fit your needs, from the development of turn-key systems, the manufacturing of Ground Support Equipment and Tooling, and a diverse range of services. We measure our success based on the complete satisfaction of our customers.

Privately owned and financially strong, our global presence makes us always available at your site. We foster an atmosphere of operational excellence, so all of our employees, processes and products are strictly focused on supporting you and your safety.

Our business units include:

GROUND SUPPORT EQUIPMENT

HYDRO stands for ultimate precision in GSE support. Our passion for precision doesn't just refer to precision in every detail, it means that we precisely provide products that are fully aligned to the needs of OEMs, airlines and maintenance facilities around the world. Before we launch a new product, it has been rigorously tested in harsh operation conditions. We set standards with uncompromising safety, total functionality, reliability, longevity and user-friendliness. That's why professionals trust in our products.

PRECISELY THE PROFESSIONAL CHOICE

AIRFRAME AND ENGINE TOOLING

We understand and accompany every tool throughout its life cycle, supporting it to perfection from cradle to grave. Every tool has a life, and we create, manage and support this life. Our well-known design capabilities, global supply chain presence, and project management experience in supporting OEMs from requirement capture to operation readiness and validation make this possible. We not only make tools to fit for function, we go the extra mile so you don't have to.

IT'S NEVER JUST A TOOL

ENGINE TRANSPORTATION

Safeguarding your valuable Engine assets requires a whole chain of events to be carefully managed, which is simplest with a HYDRO engine transport system at the very heart of your operation.
Over the years, HYDRO has set the standard for safe engine transportation. Our products stand between your engine and potential harm. We ensure every detail delivers simple operation and total safety, paired with extreme robustness for the harshest conditions.

State-of-the-art lean production ensures world-class on-time delivery of new stands to our customers. Robotic-welding, laser-tracked inspection and dedicated assembly technicians help ensure complete reliability.
Our Engine Transportation stands are supported by ten strategically located service stations around the world. Why accept any risk?

SIMPLY THE SAFEST WAY FOR YOUR ENGINE

ENGINEERED SOLUTIONS

Your future relies on your actions today. HYDRO is a competent partner that can accompany you on your path forward. For several decades, we have supported the aviation world with future leading solutions. We are the experts for even the most complex installation challenges, and our products are found in nearly all assembly lines and maintenance facilities around the world. With the support of our excellent, certified project management, you can be confident knowing that your projects will proceed properly, 100 % on time and on budget. Be assured, we will always integrate state of the art technologies to provide solutions tailored exactly to your needs.

FACILITATING YOUR FUTURE

SERVICE

With over 50 years of OEM service experience and more than 10 service stations worldwide, we are always available to take care of your issues. From proof load testing to complete full service management, we provide you with a customized care solution that ensures the ongoing operation readiness of your equipment. We deliver total reliability. With the comprehensive know-how that only the true expert can supply, we maintain, repair, train and optimize, so that you can take full advantage of the safety and efficiency of your products.

TRUSTED CARE FAR BEYOND

1_INDEX

A

ACU — Aircraft Control Unit A unit with facilities and personnel, including controllers, for conducting aircraft control and which exercises tactical control of aircraft or a unit(s).

APU — Auxilliary Power Unit The APU is a small jet engine that is used to start the larger jet engines. In airliners it's usually at the very rear of the aircraft, below the tail.

AVAD — Automatic Vertical Adjustment Device The Automatic Vertical Adjustment Device allows automatic fast and precise vertical alignment of tripod-jack at any time during the tripod positioning process.

C

CSD — Constant Speed Drive A constant speed drive is a mechanical gearbox that takes an input shaft rotating at a wide range of speeds, delivering this power to an output shaft that rotates at a constant speed, despite the varying input. It is used to drive mechanisms, typically electrical generators, that require a constant input speed.

E

EJAL — Electronic Jacking And Levelling The EJAL system is a fully automated system for synchronized aircraft lifting and lowering with a tripod-jack set.

EPS — Engine Pedestal Sets Engine Pedestal Sets (EPS) are multi-purpose systems which can be used for various engine types from different engine manufacturers for engine storage and maintenance tasks.

F

Fly-away version Shorter and lighter version of a product, to be stored in an aircraft. This version is not intended to be used in everyday application.

H

HGPU — Hydraulic Ground Power Unit The Hydraulic Ground Power Unit is used for maintenance and testing of mainline aircraft hydraulic systems.

I

IDG — Integrated Drive Generator The IDG is the world standard for constant frequency power in aircrafts. It is part of the engine.

IglooMX Patent protected aircraft maintenance shelter as "hangar-in-a-bag".

L

LTS — Laser Target System The mobile laser target system allows faster positioning of tripod-jacks for aircraft jacking. It can be universally used on all tall HYDRO tripod-jacks.

1_INDEX

M

MLG — Main Landing Gear The main landing gear is the undercarriage of an aircraft and will be used for either takeoff or landing. The main landing gear is located under the wing or next to the body structure.

N

NB — Narrow-Body A narrow-body aircraft or single-aisle aircraft is an airliner arranged along a single aisle permitting up to 6-abreast seating in a cabin below 4 metres (13 ft) of width.

NLG — Nose Landing Gear The nose landing gear is the undercarriage of an aircraft and will be used for either taxiing, towing, takeoff or landing. The nose landing gear is located under the nose of an aircraft.

R

RC-Design Compact axle-jack design. This fly-away axle-jack has been specially designed for removal and installation of aircraft wheels.

RL-Design The RL axle-jack has been designed for removing and installation of wheels and brakes in recovery conditions.

S

SCS — Supplemental Cooling System

SES — Split Engine Stand Engine transportation stand for Trent XWB engine. It can be used for road transport, air transport and engine storage. The engine is transported in a split configuration (fancase & core separately) and therefore the stand consists of 2 separate stands for fancase and core transport plus one storage container for removed engine parts.

SPTE — Special to product test equipment

Standard version Special designed tool for one aircraft application.

U

Universal version Special designed tool for a various range of aircraft application.

V

VCRU — Vapor Cycle Refrigeration Unit A compressor unit for the cooling system.

W

WB — Wide-Body A wide-body aircraft is a larger airliner usually configured with multiple aisles and a fuselage diameter of more than 5 metres (16 ft) allowing at least seven-abreast seating and often more travel classes.

WES — Whole Engine Stand Engine transportation stand for Rolls-Royce Trent XWB engine. The WES is used for road transport and engine storage, but can not be used for air transport in freighter aircrafts due to its size.

2_EQUIPMENT LIST

Equipment	Version	Location / Designation	Model-No.

ATA Chapter 06 — Dimensions & Areas

STANDARD PORTFOLIO

Aircraft Maintenance Stand		Universal	DF071554-06
Mulit-purpose Platform Stand		Universal	DF071556-03 /-03XP

ATA Chapter 07 — Lifting & Shoring

STANDARD PORTFOLIO

Tripod-Jacks	Standard Set A350-900	Wing	TJ1S08504
		Nose	TJ1S02507
		Tail	HS1009
	Standard Set A350-1000	Wing	TJ1S10001
		Nose	TJ1S02507
		Tail	HS1009
	Universal Airbus WB Set	Wing	TJ1S10001
		Nose	TJ2S03001
		Tail	HS1009
	Universal Airbus / Boeing WB Set	Wing	TJ2S11001
		Nose	TJ2S03001
		Tail	TJ1S05501

Axle-Jacks	Standard A350-900/ -1000	MLG & NLG	RT10050
		NLG	RT4550
	Fly-Away A350-900/ -1000	MLG & NLG	RC10001
		NLG	RC4509
	Recovery	MLG & NLG	RL9004
		NLG	RL4014
	Steering Test	NLG	SG244 + SG245
	Axle-jack Hose Pressure Kit		P054665

Equipment	Version	Location / Designation	Model-No.

ATA Chapter 09 — Towing & Taxing

STANDARD PORTFOLIO

Tow-bars	Universal	NLG	TOWUNIV4S TOWUNIV8S
	Fly-away	NLG	TOWA350-C-8

ATA Chapter 12 — Servicing

STANDARD PORTFOLIO

Service Carts	Standard	Nitrogen Service Cart	NBNT
		Oxygen Service Cart	NBOT
		Aircraft wheel & brake change trailer	NBWBCT
Fluid Dispenser	Standard	Fluid Dispenser	BOB
Aircraft Tyre Pressure Gauges		NLG & MLG	NTG3004
Aircraft Tyre Inflation		NLG & MLG	MK7ATIS
Water Separation and Hydraulic purifier			WSS4
Oil filling unit			AIT120001

ATA Chapter 21 — Supplement Cooling

STANDARD PORTFOLIO

Device-Fill / Drain	Standard		SCST1-FD
Handpump-Topup	Standard		SCST1-TU

2_EQUIPMENT LIST

Equipment	Version	Location / Designation	Model-No.
ATA Chapter 24 — Electrical Power			
STANDARD PORTFOLIO			
Bonding and Loop Resistance Tester	Standard		BLRT2
ATA Chapter 25 — Equipment / Furnishing			
STANDARD PORTFOLIO			
Cabin Interior Access Stand	Standard	Cabin	DF071553-01
ATA Chapter 29 — Hydraulic Power			
STANDARD PORTFOLIO			
Hydraulic Ground Power Unit	Standard		HGPU
Test Equipment for RAM-Air Turbine		RAT	RATMK350
ATA Chapter 32 — Landing Gear			
STANDARD PORTFOLIO			
Wheel/Brake Change Dolly	Standard	NLG/ MLG	MH12-005
	Universal	NLG/ MLG	WTA500AP
Landing Gear Dolly	Standard A350-900	MLG	LGD08
MLG R/I Trolley	Standard A350-900/ -1000	MLG	MLGT57
Landing Gear Access Stand		NLG/ MLG	DF0711592-04
Aircraft Wheel Chocks		NLG/ MLG	NBWC
Aircraft Wheel & Tyre handling		NLG/ MLG	NBWS
Aircraft strut & accumulation service tool		NLG/ MLG	SIC3500
Hydraulic Unit			AIT320010-001

Equipment	Version	Location / Designation	Model-No.

ATA Chapter 38 — Water / Waste

STANDARD PORTFOLIO

Waste Line Cleaning System	Standard		WLC1
Mobile Lavatory Vacuum Blockage Remover			VTBR2
Portable Water Test Equipment			PWTE1

ATA Chapter 53 — Fuselage

STANDARD PORTFOLIO

IglooMX Fuselage Shelter	6m	Fuselage	890114
	8m	Fuselage	890146
IglooMX Nose Shelter		Nose	890115
Composite Repair Shop			890151

ATA Chapter 71 — Power Plant

STANDARD PORTFOLIO

Engine Change System "COBRA"	All Engines	Engine	TP91G
Lift Adapter	Trent XWB SES-Stand	Engine	TPAA1A2A0A0B0
Engine Pedestal Set	Trent XWB	Engine	EPS002-002 + 47001-026-000
Engine Transportation	Trent XWB SES CORE Stand	Engine	RRT057891
	Trent XWB Basic STAND	Engine	RRT089139
	Trent XWB WES Engine Stand	Engine	RRT089140
Engine Tooling			
Igloo MX Engine Shelter		Engine	890177
Engine Access Stand		Universal	DF071554-07-10

ATA Chapter 78 — Engine Exhaust & Thrust Reverser

STANDARD PORTFOLIO

Handpump	Standard		AIT780003

3

DIMENSIONS & AREAS

ATA CHAPTER 06

3.1 AIRCRAFT MAINTENANCE ACCESS STAND

HYDRO PARTNER PRODUCT

DESCRIPTION

This stand is designed with an adjustable scissor lift base to give it the height required to access aircraft zones, like different wing areas as well as avionics and aft-fuselage access points.

Currently, in use at multiple operators, MRO's and aircraft manufacturers, this unit has flexibility for use on all Airbus and Boeing wide-body aircraft.

PRODUCT FEATURES

- Anti-fatigue ladder rungs rather than narrow ladder rungs (this ensures comfort when using the stands to change LRU'S, adjust components, or connect/ disconnect engines and nacelles).
- Access points at A350:
  - Wing access
  - Wing fuel panel
  - Aft pressure bulkhead access panel
  - Wing tip nav lights
  - Falp canoes/ fairings
  - Wing landing lights
  - Main entry door skills
  - Trailing edge actuator
- Inspections/ replacements
- The hydraulic pitch and height adjustment allows for the diverse angles and height variables.
- Extensive aluminum construction for easy movement and corrosion-resistant powder coat finish for longevity.
- For increased safety and ease of mobility, the stand comes equipped with 4 corner-levelling jacks, fold away tow-bars and lift truck fork pockets.
- Designed and tested in accordance with ANSI-ASC A14.7 and BS EN 131.7
- Adjustable scissor lift base
- Padding material equipped
- Fall restraint anchor points
- Controls: Hydraulic
- Ergonomic design
- High-grade materials
- 2 person movement
- Powder coated finish
- 4 corner-levelling jacks
- Fold away tow-bars
- Lift truck fork pockets
- Foot pump

AVAILABLE ACCESSORIES

- Air-powered pump
- Utilities package
- Extension
- Additional upper platform

BENEFITS

- Flexibility for use on all Boeing aircraft
- Full use on Airbus wide-body aircraft as well as the A320 Family
- Safety and reliability
- Unrivalled quality and durability
- Rigorous inspection and testing

TECHNICAL SPECIFICATION

AIRCRAFT MAINTENANCE ACCESS STAND

Model-No.	DF071554-06
Towing speed	10 kph / 6 mph
Material type	Ladder: Aluminium Frame: Steel
Certifications	ANSI-ASC A14.7, BS EN 131.7 & CE
Dimensions (shipping)	2,278 mm x 1,638 mm x 4,145 mm x 2,400 lbs 89.69 inch x 64.5 inch x 163.2 inch x 2,400 lbs
Height	Low: 3,213 mm / 126.5 inch High: 6,077 mm / 239.25 inch
Foot print	2,278 mm x 4,145 mm 89.7 inch x 163.2 inch

3.2 MULTI-PURPOSE PLATFORM STAND

HYDRO PARTNER PRODUCT

DESCRIPTION

The Aviation Platform Stand DF071556-03/-03XP has been designed for maintenance access points for a multitude of aircraft, as well as the possibility of a safe platform for two person use. The lowered position is designed to clear wheel well entry points and has been tested and is operational on both Airbus and Boeing wide-body aircraft.

The unit is in service at a multitude of operators, MRO's and manufacturers.

PRODUCT FEATURES

- Telescopic side rails ensure safety compliant access to the forward and aft lower cargo holds
- Access points at A350:
  - Forward and aft lower cargo
  - Static port inspections / replacements
  - Bulk cargo (DF071556-03 only)
  - Main gear wheel well (DF071556-03 only)
- Anti-fatigue ladder rungs
- Anti-fatigue ladder steps ensuring the safety of your maintenance staff
- Padding material equipped
- Fall restraint anchor points
- Hydraulically actuated via an ergonomically positioned foot pump
- Collapsible guardrails
- High-grade materials
- 1 person movement and testing
- Powder coated finish ensures corrosion resistance maintaining the longevity of the stand
- Controls: hydraulic foot pump
- Rigorous inspection and testing
- DF071556-03 XP has a safe platform for two person use
- Fall restraint anchor points equipped

AVAILABLE ACCESSORIES

- Air-powered pump
- Utilities package
- Tow-bar
- Telescopic rails

BENEFITS

- Flexibility for use on all wide-body Boeing aircraft
- Full use on Airbus wide-body aircraft as well as the A320 family
- Safety and reliability
- Unrivalled quality and durability
- Small footprint and greater geometry
- Rigorous inspection and testing
- Ergonomic design

TECHNICAL SPECIFICATION

MULTI-PURPOSE PLATFORM STAND

Model-No.	DF071556-03	DF071556-03 XP
Towing speed	10 kph / 6 mph	10 kph / 6 mph
Material type	Ladder: Aluminum Frame: Steel	Ladder: Aluminum Frame: Steel
Dimensions (shipping)	2,026 mm x 2,038 mm x 2,680 mm x 544 kg 79.75 inch x 80.25 inch x 105.5 inch x 1,200 lbs	2,337 mm x 2,032 mm x 2,680 mm x 635 kg 92 inch x 80 inch x 105.5 inch x 1,400 lbs
Height	Low: 1,854 mm / 73 inch High: 2,616 mm / 103 inch	Low: 1,854 mm / 73 inch High: 2,616 mm x 103 inch
Foot print	2,026 mm x 2,680 mm 79.75 inch x 105.5 inch	2,337 mm x 2,680 mm 92 inch x 105.5 inch

4

LIFTING & SHORING

ATA CHAPTER 07

4.1 TRIPOD-JACKS

DESCRIPTION

HYDRO tripod-jacks have been engineered primarily for use in aircraft maintenance. The consistent modularity allows it to be configured according to your specific requirements. Various configuration options, from the basic to the high-end versions, are available in combination with central Electronic Jacking And Levelling (EJAL) control system for safe operation.
HYDRO products are built to withstand harsh environmental conditions and rugged use. Furthermore safety and "Made in Germany" quality have the highest priority.

HYDRO TRIPOD-JACKS INCLUDE

- Tripod structure
- Hand pump with high- and low-pressure unit
- Overload relief valve for protection against overload
- Double scale indicator, e.g. bar / psi, kN / bar, t / bar
- Manually operated safety lock nut against unintended pressure relief
- Bubble level indicator for vertical alignment verification
- Height-adjustable ground plates
- Spring-loaded castors with locking mechanism
- Hard-chromium-plated cylinder tube for long and trouble free service life
- Secondary cylinder seal for protection against contaminants and to prolong life of primary seal
- Low-friction seal for uniform piston return
- Skydrol-resistant paint and galvanized plating for corrosion protection
- Movable tow-bars
- Ladder with platform or pedestal (according to jack height)
- Rain hat
- Interface for HYDRO proof load equipment
- Factory proof load with 150 % of nominal capacity incl. proof load certificate

BENEFITS

- High Quality made in Germany
- Airbus validated
- Long life-cycle
- Robust and proven design
- Secondary cylinder seal for protection against contaminants and to prolong life of primary seal
- At least 10 years spare part availability
- On-site service

TECHNICAL SPECIFICATION

STANDARD TRIPOD-JACK SET A350 – 900

	Wing	Nose	Tail
Model-No.	TJ1S08504	TJ1S02507	HS1009
Capacity	85 t 93.6 tons	25 t 27.5 tons	10 t 11 tons
Min. height	4,150 mm 163.3 inch	2,790 mm 109.8 inch	4,900 mm 192.9 inch
Hydr. lift	2,150 mm 84.6 inch	2,100 mm 82.6 inch	2,100 mm 82.7 inch
Screw ext.	250 mm 9.8 inch	250 mm 9.8 inch	250 mm 9.9 inch
Max. height	6,550 mm 257.8 inch	5,140 mm 202.3 inch	7,250 mm 285.6 inch
Airbus application	A330-200/ -200F/ -300/ -800/ -900 A340–200/ –300 **A350–900**	A330-200F **A350–900/ –1000**	A300–B2/ –B4 A330 A340–200/ –300/ –500/ –600 **A350–900/ –1000** A400M
Boeing applications		B787-8/ -9/ -10	

STANDARD TRIPOD-JACK SET A350 – 1000

	Wing	Nose	Tail
Model-No.	TJ1S10001	TJ1S02507	HS1009
Capacity	100 t 110.2 tons	25 t 27.5 tons	10 t 11 tons
Min. height	3,840 mm 151.1 inch	2,790 mm 109.8 inch	4,900 mm 192.9 inch
Hydr. lift	2,460 mm 96.8 inch	2,100 mm 82.6 inch	2,100 mm 82.7 inch
Screw ext.	250 mm 9.8 inch	250 mm 9.8 inch	250 mm 9.9 inch
Max. height	6,550 mm 257.8 inch	5,140 mm 202.3 inch	7,250 mm 285.6 inch
Airbus application	A300 A310 A330-200/ -200F/ -300/ -800/ -900 A340–200/ –300/ –500/ –600 **A350–900/ –1000**	A330-200F **A350–900/ –1000**	A300–B2/ –B4 A330 A340–200/ –300/ –500/ –600 **A350–1000** A400M
Boeing applications		B787-8/ -9/ -10	

UNIVERSAL AIRBUS WIDE-BODY TRIPOD-JACK SET

	Wing	Nose	Tail
Model-No.	TJ1S10001	TJ2S03001	HS1009
Capacity	100 t 110.2 tons	20 t 22 tons	10 t 11 tons
Min. height	3,840 mm 151.1 inch	2,250 mm 88.5 inch	4,900 mm 192.9 inch
Hydr. lift	2,460 mm 96.8 inch	2,570 mm 101.1 inch	2,100 mm 82.7 inch
Screw ext.	250 mm 9.8 inch	600 mm 23.6 inch	250 mm 9.9 inch
Max. height	6,550 mm 257.8 inch	5,420 mm 213.3 inch	7,250 mm 285.6 inch
Airbus applications	A300 A310 A330-200/ -200F/ -300/ -800/ -900 A340–200/ –300/ –500/ –600 **A350–900/ –1000**	A300 A310 A330-200/ -200F / -300/ -800/ -900 A340-200/ -300/ -500/ -600 **A350-900/ -1000**	A300–B2/ –B4 A330 A340–200/ –300/ –500/ –600 **A350–900/ –1000** **A400M**
Boeing applications		B757-200/ -300 B747-8I/ -100/ -200B/ -300/ -400 B747SP B767-200/ -200ER/ -300/ -300ER/ -400ER B777-8/ -9/ -200/ -200ER/ 200LR/ 200F/ -300/ -300ER B787-8/ -9/ -10	

UNIVERSAL AIRBUS / BOEING WIDE-BODY TRIPOD-JACK SET

	Wing	Nose	Tail
Model-No.	TJ2S11001	TJ2S03001	TJ1S05501
Capacity	110 t 121.2 tons	30 t 33 tons	55 t 60.6 tons
Min. height	2,440 mm 96 inch	2,250 mm 88.5 inch	3,600 mm 141.7 inch
Hydr. lift	3,295 mm 129.7 inch	2,570 mm 101.1 inch	2,900 mm 114.1 inch
Screw ext.	810 mm 31.8 inch	600 mm 23.6 inch	1,050 mm 41.3 inch
Max. height	6,545 mm 257.6 inch	5,420 mm 213.3 inch	7,550 mm 297.2 inch
Airbus applications	A300 A310 A330-200/ -200F/ -300 / -800/ -900 A340-200/ -300/ -500/ -600 **A350-900/ -1000**	A300 A310 A330-200/ -200F/ -300/ -800/ -900 A340-200/ -300/ -500/ -600 **A350-900/ -1000**	A300 A310 A330-200/ -200F/ -300/ -800/ -900 A340-200/ -300/ -500/ -600 **A350-900/ -1000** A380-800
Boeing applications	B747-SP B747-8I/ -400 B757-200/ -300 B767-200/ -200ER/ -300/ -300ER/ -400ER B777-200/ -200ER/ -200LR/ -200F/ -300/ -300ER B787-8/ -9/ -10	B757-200/ -300 B747-8I/ -100/ -200B/ -300/ -400 B747SP B767-200/ -200ER/ -300/ -300ER/ -400ER B777-8/ -9/ -200/ -200ER/ 200LR/ 200F/ -300/ -300ER B787-8/ -9/ -10	B747-400/ -8I/ -SP B767-200/ -200ER/ -300/ 300ER/ -400ER B777-200/ -200ER/ 200LR/ -200F/ -300/ -300ER/ -8/ -9 B787-8/ -9/ -10

Available options

Overview

Drive Units	▪ Air-hydraulic pump ▪ Electro-hydraulic pump
Safety lock nut	▪ Manually operated safety lock nut ▪ Automatically operated safety lock nut*
Castors	▪ Spring-loaded swivel castors ▪ Hydraulically height-adjustable swivel castors ▪ Hydraulically height-adjustable high speed outdoor castors
Transportation	▪ Forklift adapter ▪ PowerCat (electrical towing unit) interface
Positioning	▪ Fixed mounted laser target system ▪ Mobile laser target system
Levelling	▪ Automatic Vertical Adjustment Device (AVAD)
Lifting & Lowering	▪ Mechanical stroke measuring system ▪ Electronical stroke measuring system* ▪ Fast lowering system* ▪ Electronic jacking and levelling system (EJAL) — synchronized aircraft jacking*
Corrosion protection	▪ Hard-chromium-plated piston
Load cell system	▪ Load indication ▪ Overload warning system

*only in combination with electro-hydraulic pump

ELECTRONIC-HYDRAULIC PUMP

DESCRIPTION OF OPTIONS

DESCRIPTION

Electrically driven hydraulic pump unit for HYDRO tripod-jack use.

PRODUCT FEATURES

- Electrically driven
- Robust design
- Maximum user comfort and best view to the jacking point area during jacking operation due to the cable connected hand held controller

AVAILABILITY

- Available for all electric narrow- and wide-body HYDRO tripod-jacks

BENEFITS

- Increased operational performance
- Prepared for later update with our EJAL system and automatically operated safety lock nut
- Hand held controller

AUTOMATICALLY OPERATED SAFETY LOCK NUT

DESCRIPTION OF OPTIONS

DESCRIPTION

Electrically driven safety lock nut; specially designed for HYDRO tripod-jacks.

PRODUCT FEATURES

- Automatically operated safety lock nut during aircraft lifting and lowering operation
- Product requirement: electric driven hydraulic jack
- Electrically driven
- Robust design

AVAILABILITY

- Available for all narrow- and wide-body HYDRO tripod-jacks

BENEFITS

- Cost-efficient
- Reduction of man power
- Increased operational performance
- Especially useful for tall tripod-jacks
- Absolutely recommended for tripod-jack systems with a high level of automation
- One-man operation

HYDRAULICALLY HEIGHT-ADJUSTABLE SWIVEL CASTORS

DESCRIPTION OF OPTIONS

DESCRIPTION

Hydraulically height-adjustable swivel castors with central operation unit.

PRODUCT FEATURES

- Simple application
- Central operation of all three castors with hand pumps — close to the bubble level
- Heavy duty swivel casters with brakes for storage and swivel locks for improved towing

AVAILABILITY

- Available for all electric driven narrow and wide body HYDRO tripod-jacks
- Recommended for all bigger narrow- and wide-body tripod-jack models from a total weight of 700 kg upwards

BENEFITS

- Increased operational performance — time reduction for jack levelling and positioning
- Higher precision in jack levelling
- Especially useful for big and heavy tripod-jacks
- Increased ground clearance during towing

HYDRAULICALLY HEIGHT-ADJUSTABLE HIGH SPEED OUTDOOR CASTORS

DESCRIPTION OF OPTIONS

DESCRIPTION

Hydraulically height-adjustable swivel castors with central operation unit, specially designed for outdoor usage and improved towing speed up to 25 km/h / 15 mph.

PRODUCT FEATURES

- Robust design
- Simple application
- Hydraulic height-adjustable via hand pumps
- Heavy duty casters; two fixed castors and one castor steerable via tow-bar

AVAILABILITY

- Available for nearly all HYDRO narrow- and wide-body jacks

BENEFITS

- Solid rubber wheels — maintenance free
- Greater moving speed over longer distances up to 25 km/h / 15 mph possible
- Tripod-jack towing also on bad surfaces or over gaps and cracks/snow
- Increased operational performance — time reduction for jack moving, levelling and positioning
- Higher precision in jack levelling
- Especially useful for big and heavy tripod-jacks
- Increased ground clearance during towing

FORKLIFT ADAPTER

DESCRIPTION OF OPTIONS

DESCRIPTION

Fork lift adapters allow easy movement of tripod-jacks with a forklift even on bad surfaces or over gaps and cracks.

PRODUCT FEATURES

- Fast and cost-saving way for moving big and heavy tripod-jacks over long distances or onto a truck with a forklift
- Robust welded steel frame
- Simple application

AVAILABILITY

- Available for nearly all narrow- and wide-body HYDRO tripod-jack models

BENEFITS

- Movement of tripod-jack with fork lift also on bad surfaces or over gaps and cracks possible
- Increased operational performance

POWERCAT (ELECTRICAL TOWING UNIT) INTERFACE

DESCRIPTION OF OPTIONS

DESCRIPTION

Fast and cost-saving way for moving and positioning of big heavy tripod-jacks or other equipment

Product features

- Max. towing capacity 14,000 kg (30,800 lbs)
- All operating elements integrated in the handle / tow-bar (similar to electric powered pallet trucks)
- Battery driven (24 V – 240 Ah)
- Battery charger (option — not part of delivery)
- Different jack adapters available
- Heavy duty rollers
- Simple application

AVAILABILITY

- Developed and recommended for A380 Main Jacks
- Applicable and adaptive for all other big and heavy HYDRO tripod-jacks

BENEFITS

- Significant reduction of man power
- Master Mover
- Increased operational performance — time reduction for jack positioning
- Higher precision in jack positioning
- Useful for all heavy tripod-jacks

FIXED MOUNTED LASER TARGET SYSTEM

DESCRIPTION OF OPTIONS

DESCRIPTION

The fixed mounted laser target system allows precise and faster positioning of tripod-jacks for aircraft jacking.

PRODUCT FEATURES

- The system projects a red laser cross for easy positioning of the jack under the aircraft jacking point
- Simple application: activation by push button on jacks handheld controller

AVAILABILITY

- Laser system is available for all HYDRO narrow- and wide-body tripod-jack models
- Available only for electric powered HYDRO tripod-jack models

BENEFITS

- Increased operational performance — time reduction for aircraft jacking
- Higher precision in jack positioning
- Useful for tall tripod-jacks
- Installed on each tripod-jack

MOBILE LASER TARGET SYSTEM LTS01

DESCRIPTION OF OPTIONS

DESCRIPTION

The mobile laser target system allows precise and faster positioning of tripod-jacks for aircraft jacking. It can be universally used on all tall HYDRO tripod-jacks.

PRODUCT FEATURES

- The unit projects a laser cross for easy positioning of the jack under the aircraft jacking point
- Simple application: remove jacking adapter from the jack and replace it with LTS adapter, turn on the laser, level and position the jack under the jacking point. Universal use — system includes two adapters which cover all HYDRO narrow and wide-body tripod-jack models (excluded optional A380 main jack adapter)
- Battery driven
- Plastic storage and carrying case with foam cushioning (includes space for optional A380 adapter)

AVAILABILITY

- System can be used in combination with all HYDRO narrow- and wide-bodytripod-jack models (excluded A380 main jack — optional adapter is available)

BENEFITS

- Increased operational performance — time reduction for jack levelling and positioning
- Higher precision in jack positioning
- Reduction of man power
- Useful for tall tripod-jacks
- Universal use on all tall HYDRO tripod-jacks possible

AVAD (AUTOMATIC VERTICAL ADJUSTMENT DEVICE)

DESCRIPTION OF OPTIONS

DESCRIPTION

The Automatic Vertical Adjustment Device allows automatic fast and precise vertical alignment of tripod-jack at any time during the tripod positioning process.

PRODUCT FEATURES

- Fully automated vertical alignment device for the individual tripod-jacks
- Inclination sensor
- Proportional hydraulic valves
- Simple application: activation by push button on jacks handheld controller
- Robust design

AVAILABILITY

- Available for all narrow- and wide-body electric powered HYDRO tripod-jacks which are equipped with hydraulic height adjustable wheels

BENEFITS

- Automatic fast and precise vertical alignment of tripod-jack at any time during tripod positioning process
- Cost-efficient
- Increased operational performance
- Faster jack positioning
- Absolutely recommended for tripod-jack sets on a high level of automation
- Universal use on all tall HYDRO tripod-jacks possible

MECHANICAL STROKE MEASURING SYSTEM

DESCRIPTION OF OPTIONS

DESCRIPTION

The mechanical stroke measurement system monitors the working stroke of the hydraulic cylinders of tripod-jacks.

PRODUCT FEATURES

- Mounted outside of the cylinder
- Main components made of aluminum
- Robust and proven design

AVAILABILITY

- Available for all narrow- and wide-body HYDRO tripod-jacks

BENEFITS

- Different jacking levels can be reached repeatable
- Robust and proven design
- Failsafe
- Maintenance free
- Pure mechanical system
- Also usable as a simple synchronous lifting system

ELECTRONICAL STROKE MEASURING SYSTEM

DESCRIPTION OF OPTIONS

DESCRIPTION

The electrical stroke measurement system monitors the working stroke of tripod-jacks hydraulic cylinder. The measured stroke will be shown on a display.

PRODUCT FEATURES

- Electrical stroke measurement system — monitors the working stroke of jacks hydraulic cylinder
- Measured stroke will be shown on display (if tripod-jack is equipped with) or on EJAL control desk
- Mounted outside of the cylinder
- Robust and proven design
- Only recommended for EJAL systems

AVAILABILITY

- Available for all electric narrow- and wide-body HYDRO tripod-jack

BENEFITS

- Different aircraft jacking levels can be reached repeatable
- In conjunction with the EJAL system: measured stroke of each tripod-jack will be transmitted to the control desk. This enables precise synchronous control of all tripod-jacks during aircraft lifting and lowering
- Can also be used for limitation of hydraulic lift to prevent aircraft damage

FAST LOWERING SYSTEM

DESCRIPTION OF OPTIONS

DESCRIPTION

The Fast Lowering System increases the lowering speed of the hydraulic cylinder of tripod-jacks without load.

PRODUCT FEATURES

- Pressure sensor integrated in the hydraulic system (can also be used for limitation of jacks lifting capacity)
- The fast lowering function is automatically activated when lowering movement is activated and the cylinder- / system- pressure drops under the limit value
- Fast lowering function is automatically deactivated during movement operations of loaded cylinder
- Hydraulic system pressure will be shown on display (if tripod-jack is equipped with)
- Only recommended for tripod-jacks with automatically operated safety lock nuts

AVAILABILITY

- Available for all narrow- and wide-body HYDRO tripod-jacks

BENEFITS

- Increased lowering speed of the hydraulic cylinder without load
- Reduction of process time
- Can also be used for limitation of tripod jacks lifting capacity (maintenance panel required)

ELECTRONIC JACKING AND LEVELLING SYSTEM (EJAL)

DESCRIPTION OF OPTIONS

DESCRIPTION

The EJAL system is a fully automated system for synchronized aircraft lifting and lowering with a tripod-jack set.

PRODUCT FEATURES

- Fully automated system for aircraft lifting and lowering with a tripod-jack set
- Individual operation of jacks also possible
- Electrical system — universal useable for different tripod-jack sets
- Aircraft inclination sensor
- Touch panel display
- Cable drums with spring return for power supply of tripod-jacks and for main power supply
- Heavy duty casters with brakes
- Robust design
- Simple application

BENEFITS

- Reduction of man power
- Cost-efficient
- Increased operational performance
- Faster jacking operation
- Permanent control of aircraft inclination
- Minimized risk for the operator and aircraft through synchronized lifting and lowering operation
- Maximum safety
- High level of automation for aircraft lifting and lowering process

AVAILABILITY

- Available for all narrow- and wide-body electric powered HYDRO tripod-jack sets.

4.2 AXLE-JACKS | STANDARD AXLE-JACKS (RT-DESIGN)

DESCRIPTION

HYDRO RT axle-jacks have been engineered primarily for use in aircraft maintenance. The consistent modularity allows it to be configured according to your specific requirements. HYDRO products are built to withstand harsh environmental conditions and rugged use. Furthermore safety and "Made in Germany" quality have the highest priority.

The HYDRO RT axle-jacks offer an optimum performance for professional use.

PRODUCT FEATURES

- Integrated pneumatically-driven hydraulic pump with maintenance unit
- Integrated automatic retraction system for a quick removal of the axle-jack
- Very short extension time to jacking point (full extension in less than 1 minute)
- Manual hand pump (operated by the tow-bar)
- Optimized undercarriage for easy maneuvering
- All functional parts protected by a stainless steel cover against damage during rough operation and weather
- Cover for cylinder
- Tow-bar for operating the jack
- Stainless steel cover: all other parts are Skydrol-resistant painted
- Label with A/C applications

AVAILABLE ACCESSORIES

Transport Trolley

Single Transport Trolley SG158

Twin Transport Trolley SG169
(Two axle-jacks for 3 axis landing gear required)

Wheel Refill Unit

Hose lines:

- For small tyre valves VG8 - NB A/C's (00180-104-100)
- For big tyre valves VG12 - WB A/C's (00180-106-100)

Maintenance

- Interface for HYDRO proof load equipment

BENEFITS

- High quality made in Germany
- Long life-cycle
- Robust and proven design
- Easy maneuvering due to optimized undercarriage
- Best handling and extreme repair-friendly due to modular design and available spare parts
- Leak-proof operation because of into the oil tank integrated elements
- Stainless steel cover — all parts are protected against dirt, harsh environment and UV-radiation
- Worldwide unique manufacturing process for the high stressed components of the hydraulic cylinder
- Documented verification for each step of manufacturing for each part
- At least 10 years spare part availability
- On-site service

TECHNICAL SPECIFICATION

STANDARD AXLE-JACK (RT-DESIGN)

Model-No.	RT4550	RT9050	RT10050
Capacity	45 t 50 tons	90 t 99 tons	100 t 110 tons
Min. height	190 mm 7.5 inch	260 mm 10.2 inch	275 mm 10.8 inch
Hydr. lift	313 mm 12.3 inch	324 mm 12.7 inch	268 mm 10.6 inch
Screw ext.	70 mm 2.8 inch	114 mm 4.49 inch	59 mm 2.3 inch
Max. height	573 mm 22.6 inch	698 mm 27.5 inch	603 mm 23.7 inch

STANDARD AXLE-JACK (RT-DESIGN)

Model-No.	RT4550	RT9050	RT10050
Airbus applications	**NLG** A220-100/ -300 A318-100 A319neo/ -100/ -CJ A320-200/ -neo A321-100/ -200/ -neo A330-200/ -200F/ -300/ -800/ -900 A340-200/ -300/ -500/ -600 **A350-900/ -1000** **MLG** A300 A310 A318-100 A319-100/ -CJ A320-200/ -neo/ -4 Wheel Boogie A321-100/ -200	**NLG** A220-100/ -300 A330-200/ -200F/ -300/ -800/ -900 A340-200/ -300/ -500/ -600 **A350-900/ -1000** **MLG** A300-600/ -B2/ -B4 A310-100/ -300 A318-100 A319neo/ -CJ, A320-100/ -200/ -neo/ -Boogie LG A321-100/ -200/ -neo A330-200/ -200F/ -300/ -800/ -900 A340-200/ -300/ -500/ -600 **A350-900**	**NLG** A330-200/ -200F A330-300/ -800/ -900 A340-200/ -300/ -500/ -600 **A350-900/ -1000** **MLG** A300-600/ -B2/ -B4 A310-200/ -300 A318-100 A319NEO/ -100/ -CJ A320-200neo A321NEO/ -100/ -200 A330-200/ -200F/ -300/ -800/ -900 A340-200/ -300/ -500/ -600 **A350-900/ -1000**
Boeing applications	**NLG** B707 B727 B737-300/ -400/ -500/ -600/ -700/ -800/ -900/ -7/ -8/ -8200/ -9 B757-200/ -300 B767-200/ -300/ -400ER B777-200/ -200ER/ -300/ -200LR/ -300ER/ -9 B787-8/ -9/ -100 **MLG** B707 B717 B727 B737-100/ -200/ -200C/ -300/ -400/ -500/ -600/ -700/ -800/ -900/ -7/ -8/ -8200/ -9 B757-200/ -300	**NLG** B727-100/ -200 B747-100/ -200/ -300 B747-400/ -400ER/ -8 B757-200/ -300 B767-200/ -300/ -400ER B777-200/ -200ER/ -300/ -200LR/ -300ER/ -9 B787-8/ -9/ -10 **MLG** B707 B727-100/ -200 B737-100/ -200/ -200C/ -300/ -400/ -500/ -600/ -700/ -800/ -900/ -7/ -8/ -8200/ -9 B747-100/ -200/ -300/ -400/ -400ER/ -8 B757-200/ -300 B767-200/ -300/ -400ER B777-200/ -200ER/ -300/ 200LR/ -300ER/ -9 B787-8/ -9/ -10	**NLG** B727-100/ -200 B767-200/ -300/ -400ER B777-200/ -200ER/ -300/ -300ER B787-8/ -9/ -10 **MLG** B707-120B/ -220/ -320/ -420/ -131B/ -320B/ -C/ -720B B727-100/ -200 B737-100/ -200/ -200C/ -300/ -400/ -500/ -600 /-700/ -800/ -900/ -7/ -8/ -8200/ -9 B747-100/ -200/ -300/ -400/ -400ER/ -8 B757-200/ -300 B767-200/ -300/ -400ER B777-200/ -200ER/ -300/ -200LR/ -300ER/ -9 B787-8/ -9/ -10
Others	**NLG** DC10 MD11 Embraer 170/ -175/ -190/ -195 L1011 MC21 CS-100/ -300 **MLG** Embraer-170/ -175/ -190/ -195 Embraer E175-E2/ E190-E2/ E195-E2 Fokker 50/ -100 MD80 MD90 MC-21 RRJ95	**NLG** CS-100 CS-300 **MLG** DC-10 MD-11/ L-1011 MS21	**MLG** DC-10 Series -10/ -15/ -30/ -40 MD-11 L1011-01-100/ -200/ -500 MC-21

4.3 AXLE-JACKS | FLY-AWAY AXLE-JACKS (RC-DESIGN)

DESCRIPTION

HYDRO RC axle-jacks have been engineered primarily for use in aircraft maintenance. The consistent modularity allows it to be configured according to your specific requirements. HYDRO products are built to withstand harsh environmental conditions and rugged use. Furthermore safety and "Made in Germany" quality have the highest priority.

The HYDRO RC axle-jacks offer an optimum performance for professional use.

PRODUCT FEATURES

- Hand pump with low and high pressure unit
- Fixed undercarriage for easy maneuvering
- Tow-bar for movement and transportation
- Skydrol-resistant paint; all other parts are plated for corrosion protection
- Label with A/C applications

AVAILABLE ACCESSORIES

Drive Units

- Air-hydraulic pump

Safety Lock Nut

- Manually operated safety lock nut

Castors

- Spring loaded castors with tow-bar
- Spring loaded castors with dampened tow-bar

Transportation Transportation

- Wooden box
- Aluminum box

BENEFITS

- High quality made in Germany
- Long life-cycle
- Robust and proven design
- Easy maneuvering due to optimized undercarriage
- At least 10 years spare part availability
- On-site service

TECHNICAL SPECIFICATION

COMPACT AXLE-JACK (RC-DESIGN)

Model-No.	RC9002	RC4509	RC10001
Capacity	90 t 99 tons	45 t 50 tons	100 t 110 tons
Min. height	261 mm 10.2 inch	190 mm 7.5 inch	275 mm 10.8 inch
Hydr. lift	324 mm 12.7 inch	313 mm 12.3 inch	268.8 mm 10.6 inch
Screw ext.	112 mm 4.4 inch	70 mm 2.8 inch	59 mm 2.3 inch
Max. height	697 mm 27.4 inch	573 mm 22.6 inch	602 mm 23.7 inch
Airbus applications	**NLG** A220-100/ -300 A330-200/ -300 A340-200/ -300 A340-500/ -600 **A350-900** **MLG** A220-100/ -300 A300 A310 A318 A319/ A319neo A320/ A320neo A321/ A321neo A330-200/ -300 A340-200/ -300 A340-500/ -600 **A350-900** **CLG** A340-200/ -300/ -500/ -600	**NLG** A300 A310 A318 A319/ A319neo A320/ A320neo A321/ A321neo A330-200/ -300 A340-200/ -300/ -500/ -600 **A350-900** **MLG** A300 A310 A318 A319/ A319neo A320/ A320neo A321/ A321neo	**NLG** A300-B2 A330-200/ -200F A330-300/ -800/ -900 A340-200/ -300/ -500/ -600 **A350-900/ -1000** **MLG** A300-600/ -B2/ -B4 A310-200/ -300 A318-100 A319-100/ -CJ/ A319neo A320-100/ -200/ A320neo A321-100/ -200/ A321neo A330-200/-200F/-300/-800/-900 A340-200/-300/-500/-600 **A350-900/-1000**
Boeing applications	**NLG** B727 B747-100/ -200/ -300/ -400/ -400ER/ -8 B767-200/ -300/ -400ER B777-200/ -200ER/ -300/ -200LR/ -300ER B787-8/ -9 **MLG** B707 B727 B737-100 to -900 B737 MAX -7/ -8/ -9 B747-100/-200/-300/ -400/ -400ER/ -8 B767-200/ -300/ -400ER B777-200/ -200ER/ -300 B777-200LR/ -300ER B787-8/ -9	**NLG** B707 B727 B737-300 to -900 B737 MAX-7/ -8/ -9 B757-200/ -300 B767-200/ -300/ -400ER/ B777-200/ -200ER/ -300/ -200LR/ -300ER B787-8/ -9 **MLG** B707 B717 B727 B737-100 to -900/ B737MAX-7/ -8/ -9 B757-200/ -300	**NLG** B727-100 /-200 B767-200/-300/-400ER B777-200/-200ER/-200LR/ -300/ -300ER/-9 B787-8/-9/-10 **MLG** B707-120B/-220/-320/-420/ -131B/ -320B/C/-720B B727-100/-200 B737-100/ -200/ -200C/ -300/ -400/ -500/ -600/ -700/ -800/ -900 B737MAX -7/-8/-8200/-9 B747-100 /-200 /-300 /-400 /-400ER /-8 B757-200 /-300, B767-200 /-300 /-400ER B777-200 /-200ER /-300 /-200LR /-300ER /-9 B787-8 /-9 /-10

TECHNICAL SPECIFICATION

COMPACT AXLE-JACK (RC-DESIGN)

Model-No.	RC9002	RC4509	RC10001
Others	**NLG** CS-100/ -300 **MLG** CS-100/ -300 DC-10/ MS-21 L-1011/ MD11	**NLG** Embraer 170/ -175/ -190/ -195 DC-10/ MD11 L1011 **MLG** MD80/ MD90 MS-21 Embraer 170/ -175/ -190/ -195	**MLG** DC-10 Series -10 /-15 /-30 /-40 MD-11 L1011-01-100 /-200 /-500 MC-21

4.4 AXLE-JACKS | RECOVERY AXLE-JACK (RL-DESIGN)

DESCRIPTION

HYDRO RL axle-jacks have been engineered primarily for use in aircraft maintenance. The consistent modularity allows it to be configured according to your specific requirements.

HYDRO products are built to withstand harsh environmental conditions and rugged use. Furthermore safety and "Made in Germany" quality have the highest priority. The HYDRO RL Recovery Jacks offer an optimum performance for professional use.

PRODUCT FEATURES

- Hand pump with low and high pressure unit
- Manually operated safety lock nut
- Force indicator, e.g. bar/kN, bar, psi, ...
- Tow-bar
- Hydraulic undercarriage
- Skydrol-resistant paint
- Label with A/C applications

BENEFITS

- High quality made in Germany
- Long life-cycle
- Robust and proven design
- Easy maneuvering due to optimized undercarriage
- At least 10 year spare part availability

TECHNICAL SPECIFICATION

RECOVERY AXLE-JACK (RL-DESIGN)

Model-No.	RL9004	RL4014
Capacity	90 t 99 tons	40 t 44 tons
Min. height	70 mm 2.8 inch	70 mm 2.7 inch
Hydr. lift	620 mm 24.4 inch	500 mm 19.7 inch
Max. height	690 mm 27.2 inch	570 mm 22.4 inch
Airbus applications	**NLG** A220-100/ -300 A330 A340 A380 **MLG** A220 A300 A310 A320 A330 A340 **A350-900/ -1000** **CLG** A340-200/ -300 **WLG** A380	**NLG** A300-B2/ -B4/ -600 A300F4-600 A310 A318 A319 A320 A321 **A350-900** **MLG** A300-B2/ -B4 A300-600 A300F4-600 A310 A318 A319 A320 A321
Boeing applications	**NLG** B727 B787 **MLG** B707 B727 B737 B747 B757 B777 B787 **WLG** B747	**NLG** B737-600/ -700/ -800/ -900 B777 B787 **MLG** B737-300/ -400/ -500 B737-600/ -700/ -800/ -900 B757
Others	**NLG** DC10-/ MD11 RRJ-95 CS-100/ -300 **MLG** DC10/ MD11 Embraer 190/ 195 CS-100/ -300	

4.5 STEERING TEST EQUIPMENT

DESCRIPTION

This special jack has been engineered primarily for steering tests.

PRODUCT FEATURES

- Hydraulically height-adjustable via hand pump and hydraulic cylinder
- Max. load of 6.5 t (7.2 short tons)
- Rotation adapter interface with special axial cylindrical roller bearing
- Undercarriage (3 roller bearings) for fine positioning
- Forklift slots
- Skydrol-resistant paint

AVAILABLE ACCESSORIES

SG245 NLG Adapter

Rotating adapter with special axial cylindrical roller bearing.

BENEFITS

- High quality made in Germany
- Long life-cycle
- Robust and proven design
- Easy maneuvering due to optimized undercarriage
- Best handling and extreme repair-friendly due to modular design and available spare parts
- At least 10 year spare part availability
- On-site service

TECHNICAL SPECIFICATION

STEERING TEST EQUIPMENT

Model-No.	SG244
Capacity	6.5 t 7.2 short tons
Application	A350–900 (MLG & NLG)

4.6 AXLE-JACK HOSE PRESSURE KIT

HYDRO PARTNER PRODUCT NEWBOW AEROSPACE

DESCRIPTION

The axle-jack hose pressure kit P054665 is primarily designed to allow the aircraft tyre gas to operate the axle-jack.
The axle-jack hose kit features an overall length of 4-meters to allow good flexibility around the aircraft when changing the wheel and operating the axle-jack as well as allowing a safe working distance for the operator.
Equipped with an integrated isolation valve, the operator can accurately control the gas flow from the wheel to the axle-jack making for a safe operation.
The hose features a safe screw-on valve adapter which interfaces with the aircraft wheel offering added safety to the user when working with high pressure gases.

PRODUCT FEATURES

- 4-meter length hose
- Isolation valve to control gas flow
- Double braided hose with rubber covering
- Safe screw-on tyre valve adapter

AVAILABLE ACCESSORIES

- Fitment to 8 V size tire valves and axle-jack
- Fitment to 12 V size tire valves and axle-jack
- Fitment to 8 V and 12 V size tire valves and axle-jack

BENEFITS

- Optimal efficiency
- Accurate gas flow control
- Allows the operator flexibility when in use

TECHNICAL SPECIFICATION

AXLE-JACK HOSE PRESSURE KIT

Model-No.	P054665	P054665-1	P054665-SL
Variant	Small tyre valve to axle-jack hose kit	Large tyre valve to axle-jack hose kit	Small and large size tyre valves to axle-jack kit

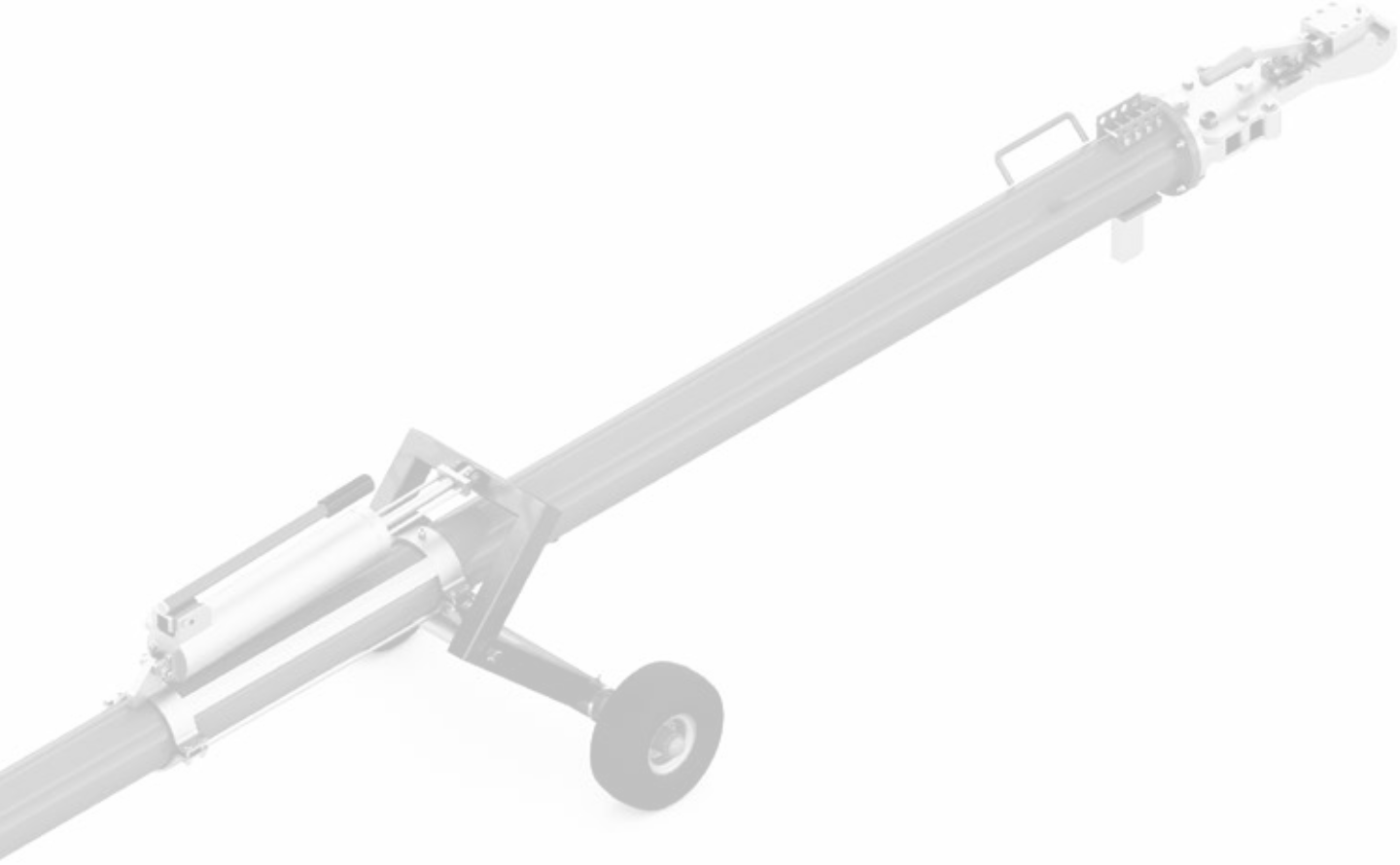

5

TOWING & TAXING

ATA CHAPTER 09

5.1 TOW BAR (STANDARD)

DESCRIPTION

HYDRO tow-bars are designed in accordance to the requirements from aircraft manufacturers and the applicable norms and standards.

PRODUCT FEATURES

- Rigid tow head, clamp type
- Rigid tow eye diameter 3 inch (76.2 mm)
- Main tube made of high strength steel
- Maintenance free hand pump with integrated spring and dead man circuit for high safety
- Shear pin for push / pull and torque and retaining pin for maximum safety
- Hydraulically height adjustable undercarriage with floating axle system and pneumatic tires
- Tube-mounted spare shear pin holder incl. 4 x spare shear pins and 2 x retaining pins
- Skydrol-resistant paint
- Label with A / C applications

OPTIONS

Tow Head

- Revolving tow head

Tow Eye

- Revolving tow eye
- Revolving tow eye plus damper

Undercarriage

- Height-adjustable undercarriage with solid rubber tires

BENEFITS

- High quality made in Germany
- Designed to norms
- Long life-cycle
- Ergonomic design
- Maintenance free worldwide unique new hand pump system
  All in one system (integrated cylinder, hand pump, oil reservoir and return spring)
  Encapsulated hydraulic system (no rubber hoses, no fittings)
  Death man circuit
  Maintenance free
  Fast and easy replacement of the hand pump
- Wide range of available options
- Easy maneuvering due to optimized undercarriage with integrated floating axle system
- Tow head design integrated shear pins and retaining pin
- At least 10 year spare part availability
- On-site service

TECHNICAL SPECIFICATION

TOW-BAR (STANDARD)

Model-No.	TOWUNIV4S	TOWUNIV8S
Length	4,410 mm 173.6 inch	4,410 mm 173.6 inch
Weight	368 kg 811.3 lbs	368 kg 811.3 lbs
Airbus applications	A330 A340-200/ -300 **A350-900/ -1000**	A330 A340–200/ -300 **A350-900/ -1000**
Boeing applications	B767	B767 B777-200/ -300/ -200LR/ -300LR B787-8/ -9/ -10
Others	L-1011 IL-96	

5.2 TOW-BAR (FLY-AWAY)

DESCRIPTION

HYDRO tow-bars are designed in accordance to the requirements from aircraft manufacturers and the applicable norms and standards.

PRODUCT FEATURES

- Rigid tow head, clamp type
- Rigid tow eye diameter 3 inch (76.2 mm)
- Main tube made of high strength steel
- Shear pin for push/pull and torque and retaining pin for maximum safety
- Convertible undercarriage for easy handling
- Skydrol-resistant paint
- Label with A/C applications

AVAILABLE ACCESSORIES

Transportation Box

Wooden box

BENEFITS

- High quality made in Germany
- Designed to norms
- Long life-cycle
- Ergonomic and light design
- Easy maneuvering due to convertible undercarriage
- Tow head design integrated shear pins and retaining pin
- At least 10 year spare part availability
- On-site service

TECHNICAL SPECIFICATION

TOW-BAR (FLY-AWAY)

Model-No.	TOWA350-C-8
Length	2,500 mm 98.4 inch
Weight	103 kg 227.1 lbs
Application	A330 A340–200/–300 **A350–900/–1000**

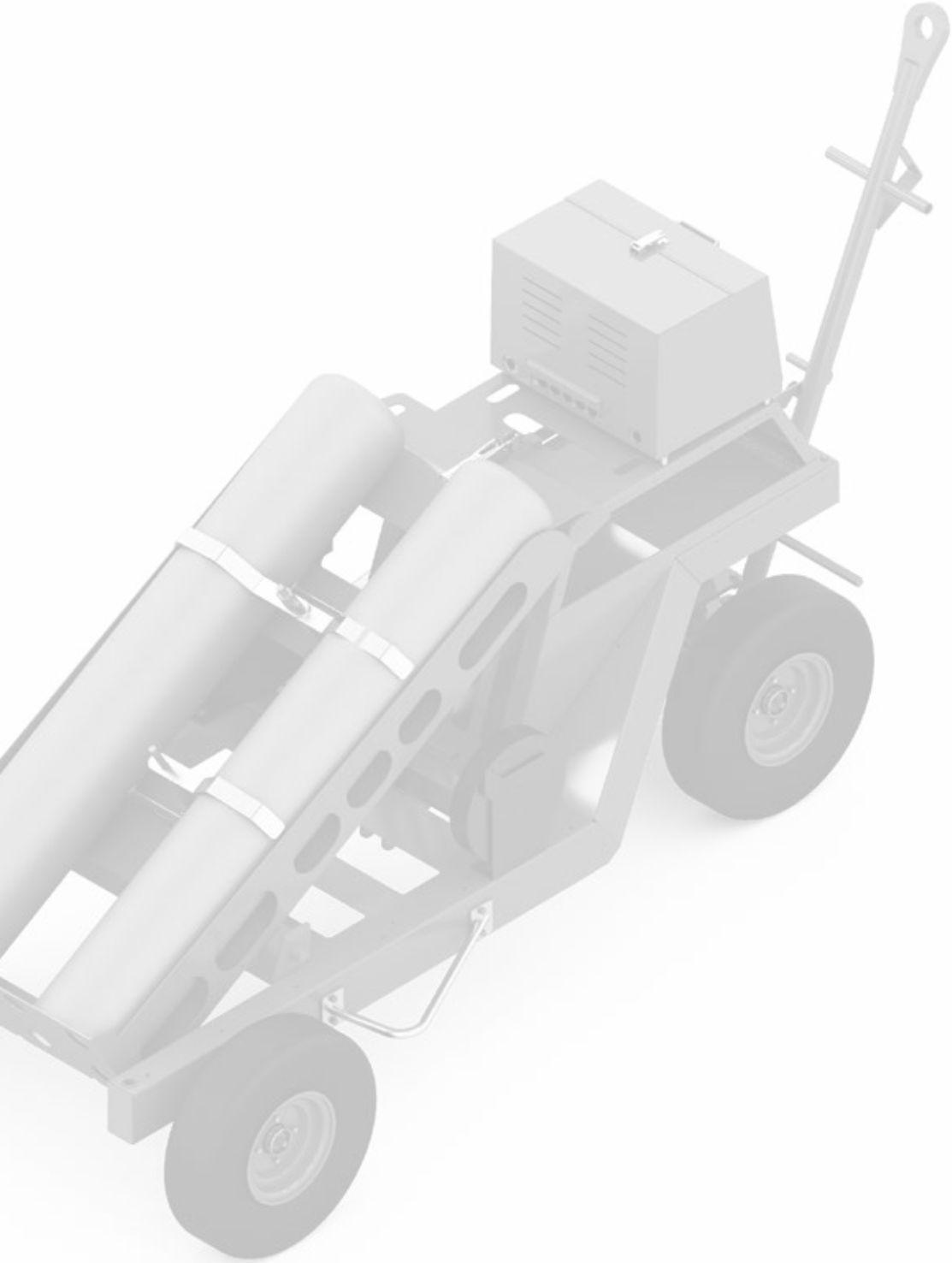

6

SERVICING
ATA CHAPTER 12

6.1 NITROGEN SERVICE CART

HYDRO PARTNER PRODUCT
NEWBOW AEROSPACE

DESCRIPTION

The Nitrogen service cart is available as two or four bottle variants. The unique design allows all nitrogen cylinders to be loaded or off-loaded simultaneously by a single person. This specific design incorporates all relevant occupational health and safety requirements for manual handling and allows operators to undertake their desired tasks safely and efficiently.

The dual use colour coded low and high pressure certified nitrogen charging panel housed within a waist-height weather-proof cabinet features one calibrated inlet pressure gauge, one calibrated LOW outlet pressure gauge and one calibrated HIGH outlet pressure gauge.

The low pressure 330 psi and high pressure, 3,300 psi nitrogen charging configuration is operated by self-venting regulators, secondary isolation valves and features built-in excess pressure relief valves, allowing for optimum pressure settings to be achieved when undertaking nitrogen servicing and replenishment tasks.

PRODUCT FEATURES

- Self-venting regulators and secondary isolation valves
- Auto retractable hose reels each with 9-metre hose
- Easy load cylinder stowage tray (manual operation for 2-bottle variant and hydraulic operation for 4-bottle variant)
- 50 mm towing eye
- Ground Support Equipment BS EN compliant
- Calibrated and certified
- Spare parts and components readily available
- Finish: Zinc phosphate primer with top layer powder-coat finish in RAL1028 (yellow)
- Modular charging system
- On-site service
- Dual use charging system; Low pressure and high pressure charging systems are integrated inside a single box
- Pressure relief and isolation valves

BENEFITS

- Safety and reliability
- Easy-load system
- Unrivalled quality
- Ergonomic design
- Modular charging system
- On-site service

AVAILABLE ACCESSORIES

Country compatible cylinder connectors

- UK nitrogen bottle connection
- German nitrogen bottle connection
- French nitrogen bottle connection
- USA / North America / Singapore bottle connection

GB-D30 gas booster

- Is driven by a nitrogen / compressed air supply
- Is controlled by a separate supply inlet regulator which mounts to the booster supply gas bottle
- When the cart is equipped with a gas booster it will allow a greater outlet pressure to be achieved
- In addition, the gas booster optimises the gas contents of the cylinder resulting in long-term efficiencies

OPTIONS

- 2-bottle variant or 4-bottle variant
- Fully fitted gas booster allows intensified outlet pressure & full cylinder consumption
- In-situ cylinder re-fill port - Integrated re-fill port allows cylinder refill without removing cylinders
- Any colour paint finish - RAL code is required to allow for different paint colour
- Different size towing eye
- Weather-proof cover
- GB-D30 gas booster

TECHNICAL SPECIFICATION

NITROGEN SERVICE CART

Model-No.	NBNT
Lenght	2,700 mm 106.3 inch
Width	1,324 mm 52.1 inch
Height	1,441 mm 56.7 inch

Variant	
NBNT-2	2 bottles
NBNT-4	4 bottles
NBNT-2B	2 bottles + GB-D30 gas booster
NBNT-4B	4 bottles + GB-D30 gas booster

6.2 OXYGEN SERVICE CART

HYDRO PARTNER PRODUCT
NEWBOW AEROSPACE

DESCRIPTION

The Oxygen service cart is available as two or four bottle variants. The unique design allows all oxygen cylinders to be loaded or off-loaded simultaneously by a single person. This specific design incorporates all relevant occupational health and safety requirements for manual handling and allows operators to undertake their desired tasks safely and efficiently.

The certified charging panel is housed within a waist-height weatherproof cabinet and features one calibrated inlet pressure gauge and one calibrated outlet pressure gauge. To minimize static and heat build-up from fast flowing oxygen bottle gas, the charging panel inlet features heavy-duty brass heat-soak stems along with oxygen grade hose and piping.

The charging configuration (2,400 psi) is operated by a self-venting regulator, secondary isolation valve and features a built-in excess pressure relief valve allowing optimum pressure settings to be achieved.

All components associated with the oxygen service cart are oxygen cleaned, certified and traceable. The 4-bottle easy load oxygen cart features inert, oxygen safe fluid within the hydraulic cylinder tray operating system.

PRODUCT FEATURES

- Self-venting regulator and secondary isolation valve
- Auto retractable hose reel with 9-metre hose
- Easy load cylinder stowage tray (manual operation for 2-bottle variant and hydraulic operation for 4-bottle variant)
- Earth grounding reel and cable
- 50 mm towing eye
- Ground Support Equipment BS EN compliant calibrated and certified
- Spare parts and components readily available
- Finish: Zinc phosphate primer with top layer powder-coat finish in RAL1028 (yellow)
- Modular charging system
- Self-venting regulator
- Easy-load system
- Pressure relief and isolation valves
- Heat soak

AVAILABLE ACCESSORIES

Country compatible cylinder connectors

- UK oxygen bottle connection
- German oxygen bottle connection
- French oxygen bottle connection
- USA / North America / Singapore bottle connection

GB-D30 gas booster

- Is driven by a nitrogen / compressed air supply
- Is controlled by a separate supply inlet regulator which mounts to the booster supply gas bottle
- When the cart is equipped with a gas booster it will allow a greater outlet pressure to be achieved
- In addition, the gas booster optimises the gas contents of the cylinder resulting in long-term efficiencies

OPTIONS

- 2-bottle variant or 4-bottle variant
- Fully fitted gas booster allows intensified outlet pressure & full cylinder consumption
- In-situ cylinder re-fill port - Integrated re-fill port allows cylinder refill without removing cylinders
- Any colour paint finish - RAL code is required to allow for different paint colour
- Different size towing eye
- Weather-proof cover
- Powder fire extinguisher - 3 kg powder fire extinguisher and retaining bracket
- Self-venting regulator
- Pressure relief and isolation valves
- GB-D30 gas booster

BENEFITS

- Safety and reliability
- Unrivalled quality
- Ergonomic design
- On-site service
- Modular charging system
- Easy-load system

TECHNICAL SPECIFICATION

OXYGEN SERVICE CART

	NBOT
Lenght	2,700 mm 106.3 inch
Width	1,324 mm 52.1 inch
Height	1,441 mm 56.7 inch

NBOT-2	2 bottles
NBOT-4	4 bottles
NBOT-2B	2 bottles + GB-D30 gas booster
NBOT-4B	4 bottles + GB-D30 gas booster

6.3 AIRCRAFT WHEEL AND BRAKE CHANGE TRAILER

HYDRO PARTNER PRODUCT
NEWBOW AEROSPACE

DESCRIPTION

The aircraft wheel and brake change service support trailers have been primarily designed to aid with fast, safe and effective wheel and brake change operations on the ramp, around the airport and even within the hangar.

Designed to accommodate any two aircraft wheels (up to A380 size), one wheel and brake change dolly, one axle-jack and a multitude of aircraft tooling, the Newbow Aerospace wheel and brake change trailer is the ultimate aviation mobile service support centre. The trailer is accessed via the spring balanced rear ramp door that offers a minimal gradient, which allows one person to easily load and off-load large aircraft wheels and the axle-jack. Inside the trailer is a centrally mounted (removable) workbench that allows operators to undertake any additional tasks. The front mounted towing arm features an integrated double acting parking brake.

The nitrogen system consists of a modular weatherproof charging cabinet featuring a calibrated low and high pressure configuration, two auto-retractable hose reels, a cylinder connection manifold and two gas cylinder stowage points and restraints. In addition, the aircraft wheel and brake change trailers can be fully customized ahead of manufacture to meet any individual and operator requirements. In association with our strategic partner network, global re-calibration, service, repair and overhaul of the nitrogen cabinet is offered along with a charging system exchange scheme.

PRODUCT FEATURES

- Fully enclosed or open top
- Spring assisted low gradient rear ramp door
- Towing arm with integrated double acting parking brake
- Front axle and enclosed turntable assembly
- 2-pack paint finish, skydrol resilient
- Operational payload 1000 kg as standard
- Storage for 2 x wheels, 1 x axle-jacks
- Brake pack, 1 x wheel dolly & tooling
- Front mounted tool box or nitrogen
- Charging system
- Internal workbench (removable)
- Ground Support Equipment BS EN and H&S compliant
- Certified
- Serviceable
- Fully traceable
- Reliable, robust and safe
- NBWBCT-70280 & 70275 feature extra side ramp door
- NBWBCT-70280 & 70275 can store additional contents
- Optional modular nitrogen system
- Side and rear access ramps
- Adjustable ride height rear suspension
- Overrun braking system with braked hubs

OPTIONS

- Standard or nitrogen configuration
- Any colour paint finish
- Customer corporate logos
- Fully customized solutions available

AVAILABLE ACCESSORIES

- Country compatible gas cylinder connections (N2 option)
- Mobile wheel mover

BENEFITS

- Ground Support Equipment BSEN compliant
- Ergonomic design
- Easy loading and off-loading

TECHNICAL SPECIFICATION

AIRCRAFT WHEEL AND BRAKE CHANGE TRAILER

Trailer	Length	Width	Heigth
NBWBCT-70280	4,666 mm 183.7 inch	2,400 mm 94.5 inch	2,102 mm 82.8 inch
NBWBCT-70275	4,666 mm 183.7 inch	2,400 mm 94.5 inch	2,102 mm 82.8 inch
NBWBCT	3,486 mm 137.2 inch	2,336 mm 92 inch	1,997 mm 78.6 inch
NBWBCT-N2	3,486 mm 137.2 inch	2,336 mm 92 inch	1,997 mm 78.6 inch
NBWBCT-70281 (Open top)	3,486 mm 137.2 inch	2,336 mm 92 inch	1,384 mm 54.5 inch
NBWBCT-70282 (Open top)	3,486 mm 137.2 inch	2,336 mm 92 inch	1,384 mm 54.5 inch

6.4 FLUID DISPENSER

DESCRIPTION

The fluid dispenser allows serving aircraft hydraulic reservoirs, engines, APU, IDG, CSD, landing gear struts, thrust reversers, actuators and many more.

PRODUCT FEATURES

- Translucent specially formulated polyethylene reservoir, compatible, for all fluids
- Easy fluid level control
- Screwed filler cap, big size
- Colored fluid placard
- Galvanized steel handle
- Hand pump, stainless steel shaft and laminated aluminum handle (Double sealed with relief valve)

OPTIONS

Dispenser sizes

- 2 US gallon (7.6 litres)
- 5 US gallon (19 litres)
- 20 US gallon (76 litres)

Fluid Designation & Placard

- A - EXXON 2380
- B - ENGINE OIL
- C - MOBIL 254
- D - 5606
- E - MOBIL JET II
- F - 2197
- G - SKYDROL
- H - HYDRAULIC OIL
- K - HYJET IV
- L - CSD/IDG

BENEFITS

- Ergonomic design
- On-site service

TECHNICAL SPECIFICATION

FLUID DISPENSER

Model-No.	BOB02	BOB05	BOB20
Reservoir capacity	7.6 litres (2 US gallon)	19 litres (5 US gallon)	76 litres (20 US gallon)
Pump outlet pressure	175 psi 79 – 83 kPA	175 psi 79 – 83 kPA	175 psi 79-83 kPA
Volume per stroke	7.2 cubic in./ 120 cc	7.2 cubic in./ 120 cc	7.2 cubic in./ 120 cc
Hose lenght	2,200 mm 86.6 inch	4,500 mm 177 inch	4,500 mm 177 inch
Net weight (empty)	14 lbs/ 6.4 kg	48 lbs/ 21.8 kg	74 lbs/ 33.6 kg
Filter rating	10 Micron (nominal)	10 Micron (nominal)	10 Micron (nominal)
Total height	428 mm 16.82 inch	1,028 mm 40.5 inch	1,028 mm 40.5 inch
Total length	314 mm 12.36 inch	603 mm 23.75 inch	603 mm 23.75 inch
Width	267 mm 10.5 inch	464 mm 18.3 inch	464 mm 18.3 inch

6.5 AIRCRAFT TYRE PRESSURE GAUGES

HYDRO PARTNER PRODUCT
NEWBOW AEROSPACE GROUND SUPPORT EQUIPMENTS

DESCRIPTION

The aircraft tyre pressure checking gauges are offered in a wide range of configurations allowing coverage of all make and model aircraft.
Each tyre pressure gauge is calibrated to an accuracy of ±1 % allowing optimum aircraft tyre pressure settings to be achieved.
The 100 mm pressure gauge dial face allows instant visibility of the tyre pressure making the operators task very efficient in any environment.
The wide range of push-on tyre valve adapters are designed to interface with 8 V and 12 V tyre valves and cover any tyre aircraft in service.

PRODUCT FEATURES

- Calibrated accuracy ±1 %
- EN837-1 compliant
- Single scale dial
- 260 psi, 300 psi, 400 psi, 450 psi, 500 psi ranges available
- Shatter proof lens
- 100 mm dial for easy visibility
- Protective rubber cover
- 450mm air hose assembly
- Wide range of adapter to interface with the tyre valve
- Released with calibration test certificate
- "night glow" dial face which automatically illuminates the dial during dark environments
- Dual scale dial, psi & bar

BENEFITS

- Accurate tyre pressure setting
- Easy to use
- Ergonomic design
- Instant pressure visibility
- Suitable for any aircraft

TECHNICAL SPECIFICATION

AIRCRAFT TYRE PRESSURE GAUGES

Variant	260 PSI	300 PSI	400 PSI	450 PSI	500 PSI
Pressure gauge with INLINE adapter for 8 V size tyre valves	NTG2604-S	NTG3004-S	NTG4004-S	NTG4504-S	NTG5004-S
Pressure gauge with INLINE adapter for 12 V size tyre valves	NTG2604-L	NTG3004-L	NTG4004-L	NTG4504-L	NTG5004-L
Pressure gauge with ANGLED adapter for 8 V size tyre valves	NTG2604-HH1	NTG3004-HH1	NTG4004-HH1	NTG4504-HH1	NTG5004-HH1
Pressure gauge with ANGLED adapter for 12 V size tyre valves	NTG2604-HH1L	NTG3004-HH1L	NTG4004-HH1L	NTG4504-HH1L	NTG5004-HH1L
Pressure gauge with 90 degree universal adapter for 8 V and 12 V size tyre valves	NTG2604-D	NTG3004-D	NTG4004-D	NTG4504-D	NTG5004-D
Pressure gauge with 2 x INLINE adapters for 8 V and 12 V size tyre valves	NB2604-D	NB3004-D	NB4004-D	NB4504-D	NB5004-D

6.6 AIRCRAFT TYRE INFLATION

HYDRO PARTNER PRODUCT
NEWBOW AEROSPACE GROUND SUPPORT EQUIPMENT

DESCRIPTION

The aircraft tyre inflation tools and kits are offered in a wide range of configurations allowing coverage of all make and model aircraft.
The 350 psi inflation tool allows accurate inflation of the aircraft tyre as well as vent capability. An optional excess pressure relief valve can be integrated allowing automatic venting of inflation gas, factory pre-set to vent between 0 psi and 350 psi. The tyre inflation kits can be provided with a range of inflation hoses each at a two-metre length to allow a safe working distance for the operator. The inflation hoses all feature safe screw-on thread type inflation adapters offering added safety during the tyre inflation procedure.

PRODUCT FEATURES

- Calibrated accuracy ±1.5 %
- EN837-1 compliant
- Single scale dial
- 350 psi working pressure
- Shatter proof lens
- Inflation & deflation capability
- Pre-use accuracy check
- 2-meter length inflation hoses
- Compatible inflation tool and hoses
- Released with calibration test certificate

OPTIONS

- "Night glow" dial face which automatically illuminates the dial during dark environments
- Excess pressure relief valve fitted to the inflation tool body

BENEFITS

- Accurate tyre inflation
- Operator safety
- Easy to use
- Safe working distance

TECHNICAL SPECIFICATION

AIRCRAFT TYRE INFLATION

Model-No.	MK7ATIS-001	MK7ATIS-002	MK7ATIS-002	MK7ATISGBC-GH
Scale dial	0-350 psi	0-350 psi	0-350 psi	0-350 psi
Tyre inflation	2-metre tyre inflation hose with small valve inflation adapter	2-metre tyre inflation hose with small valve inflation adapter + 2-metre tyre inflation hose with large valve inflation adapter	2-metre tyre inflation hose with large valve inflation adapter	without inflation hose

6.7 OIL FILLING UNIT

DESCRIPTION

Filling unit to replenish the APU, or IDG/CSD. Fluid Type: Turbine oil.

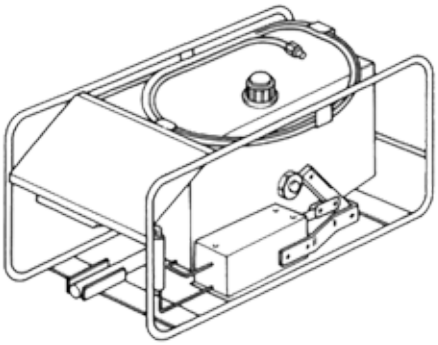

TECHNICAL SPECIFICATION

	AIT120001
Aircraft application	Universal
Application	all

6.8 WATER SEPARATOR AND HYDRAULIC PURIFIER

HYDRO PARTNER PRODUCT TESTFLIGHT

DESCRIPTION

This equipment is mainly used to separate water from hydraulic fluid (phosphate ester based medium of type IV and V), to remove particles and air.
The unit is capable to significantly reduce water content in phosphate ester based hydraulic media (Skydrol, Hyjet).
It can be used with with all HGPUs to purify A/C or HGPU hydraulic fluid (works directly on the A/C connected in the return line) and can be applied during the course of routine maintenance activities.
In general Airliners can choose between oil change or purification (ATA Chapter 12). Purification of the hydraulic fluid increases the life time and unscheduled ground times and disposal of tons of oil can be avoided.
Also oil from drum can be refreshed - did you know that often new oil has too much water inside?
The unit was developed in cooperation with and tested at Austrian and Lufthansa.

PRODUCT FEATURES

- The system is developed to separate water from phosphate ester based medium of type IV and V
- The equipment drains the A/C system during regular maintenance tasks, when the A/C is supplied via a hydraulic supply
- The hydraulic medium in the hydraulic supply can be drained as well
- The system reaches water concentrations below 1000ppm
- Compact and robust design - double axle chassis with steering axle and tow-bar
- Mechanic safety brake for usage without drawing vehicle
- Integrated humidity sensor
- Filter to separate particles from oil
- Oil-oil heat exchanger for energy recovery
- Developed for transport by forklift truck

OPTIONS

Couplings for the following A/C:

- A350
- A380
- B787

TECHNICAL SPECIFICATION

WATER SEPARATOR AND HYDRAULIC PURIFIER

Model-No.	WSS4
Electrical supply (requirement)	Mains connection: 3/PE AC 50 Hz 400 V Performance: approx. 12 kVA Nominal current: max. 17 A Back-up fuse: 20 Agl
Flow	Inlet: max. 225 l/ min (limited) (52,4 gal/ min)
Medium	All phosphat ester based media
Operating conditions	Ambient temperature: 5 to 45 °C (41 to 113 °F) Storage temperature: -25 to +50 °C (-13 to 122 °F) Rel. air humidity: 50 to 95 % (non-condensing)
Filter	Inlet: 25 mic. Outlet: 3 mic. System: 10 mic.
Dimensions	Weight: approx. 850 kg/ 1.874 lbs 3,169 mm (2,247 mm folded tow-bar) x 1,169 mm x 1,544 mm 124.8 inch (88.5 inch folded tow-bar) x 46 inch x 60.8 inch

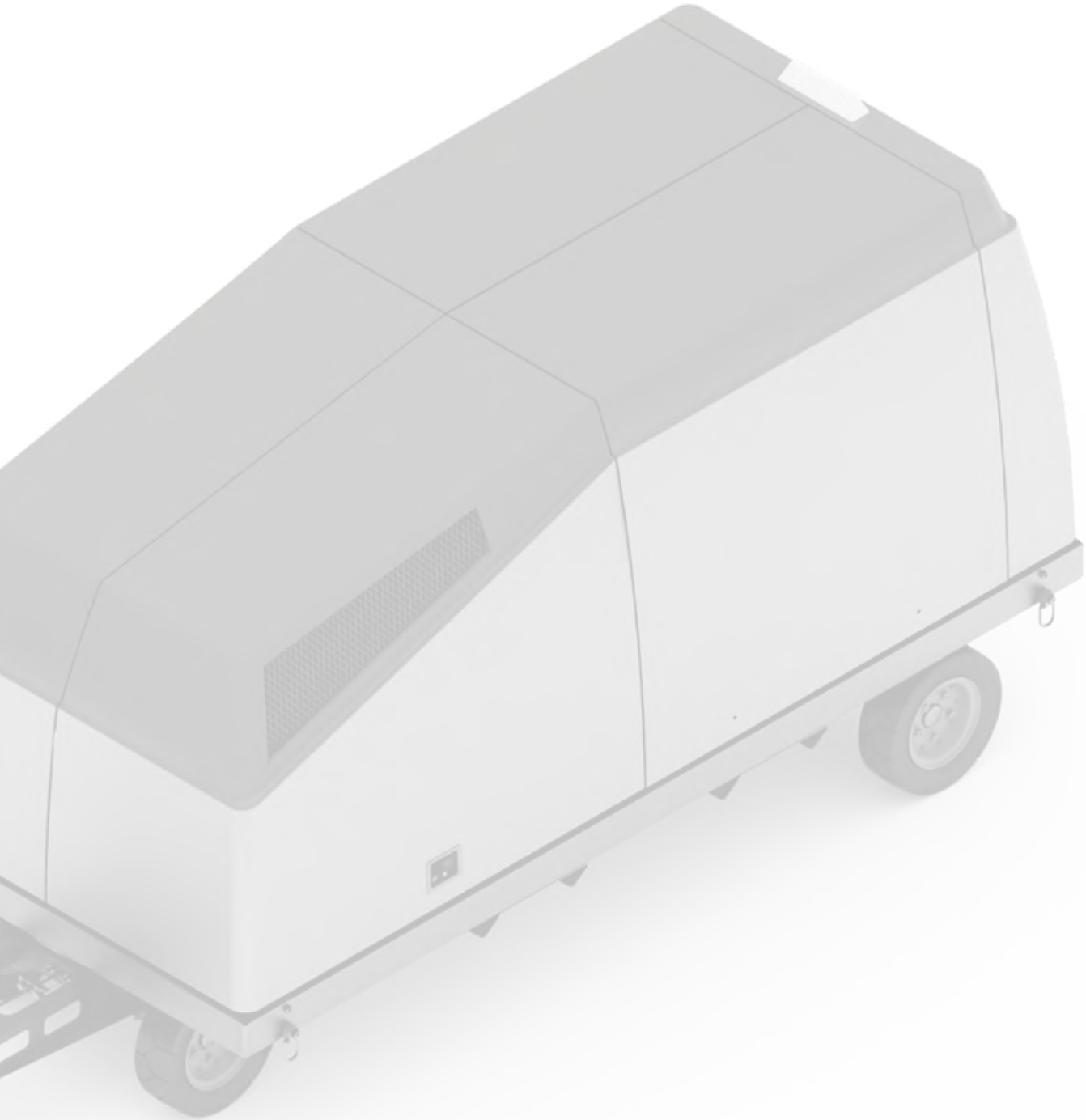

7

SUPPLEMENT COOLING
ATA CHAPTER 21

7.1 DEVICE-FILL / DRAIN

HYDRO PARTNER PRODUCT TESTFLIGHT

DESCRIPTION

Fully-automatic filling, draining, bleeding, replenishing and emptying of the Supplemental Cooling System (SCS).

The equipment allows a user friendly ergonomic setup and easy operation via display and buttons. Interruption of service tasks with re-entry is possible (replenishing with nitrogen).

Safe and trouble-free operation is possible also in case of extreme environmental conditions. The connection to the A/C or their components will be performed in connection with the appropiate adapter kits.

The equipment has been developed for the following purposes:

- Fill of whole system
- Drainage of whole system
- Top up of accumulator
- Top up and drainage of small ACU, SCS Chiller and VCRU

PRODUCT FEATURES

- All preparation tasks for the Device-Fill / Drain, SCS can be carried out before the actual application on the A/C
- Easy maintenance via hinged or removable covers
- Compact and robust design — double-axis-chassis with steering axle and towing-bar
- Spring-loaded chassis available as an option, recommended for long towing distances
- Mechanic safety brake, also for use without towing vehicle
- 2 EA hoses 15 m (49 ft) for the connection to the aircraft (1 x fill, 1 x drain)
- 1 EA AC / GSE interconnection cable 15 m (49 ft)
- 1 EA grounding cable to establish potential equalization
- 1 EA current supply cable 20 m (66 ft) with CE-plug for operation by the external electrical supply
- 1 set of nitrogen connections for world-wide application
- Equipped for the transport by forklift

AVAILABLE ACCESSORIES

- Diesel engine operated unit
- Option: Spring-loaded chassis
- In case of long towing distances, the device must be prevented from damage by integrating spring-loaded axes into the chassis
- Cover paint alternative to standard
- Paint is skydrol-resistant
- Standard-cover paint: light grey (RAL 7035) / yellow orange (RAL 2000)

OPTIONS

- Drum pump: with the drum pump, the medium can easily be pumped off the canister or off a barrel into the Main-Reservoir
- PH-Meter: to determine the pH-value of the medium according to AMM
- Sampling glass: measuring glass for sample taking of the medium during pH-value measurement
- Dust Cover: for protection from climatic influences and contamination during storage
- Kit-Adapter GSP (SCS350) for top up accumulator, filling of whole system and draining of whole system
- Kit-Adapter CU (SCS240) for top up and drainage of small ACU, SCS chiller and VCRU

BENEFITS

- Airbus certified
- User friendly ergonomic setup and operation
- World-wide universal connection (compatible with multiple voltages)
- For hangar and outdoor usage
- Minimized service time
- On-site service

TECHNICAL SPECIFICATION

Model No.		SCST1-FD
Electrical supply (requirements)	Mains connection	3 / PE AC 50 / 60 Hz 380 – 480 V
	Nominal current	32.8 A
	Performance	16.5 kVA
	Back-up fuse	32 A gG
Medium	Propylen Glycol Water (according to Airbus specification and not included in delivery)	
Reservoir volume	Main-reservoir	approx. 180 l (47 gal)
	Drain-reservoir	approx. 190 l (50 gal)
	Sub-reservoir	approx. 25 l (6.6 gal)
Operating conditions	Ambient temperature	–30 to +50 °C –22 to +122 °F
	Storage temperature	–30 to +60 °C –22 to +140 °F
Nitrogen supply (requirements)	Input: min. 20 bar (min. 290 psi) (external supply)	
Nitrogen connectors	AN4; 8S; AN6 or Schrader	
Dimensions	Length	3,400 mm 133.8 inch (tow-bar folded up) 4,400 mm 173.2 inch (tow-bar folded up)
	Width	1,350 mm 53.2 inch
	Height	1,600 mm 63.0 inch

7.2 HANDPUMP-TOPUP

HYDRO PARTNER PRODUCT TESTFLIGHT

DESCRIPTION

Fully-automatic filling, draining, bleeding, replenishing and emptying of the Supplemental Cooling System (SCS).

User friendly ergonomic setup of the device, simple, compact and robust setup, such as easy access for maintenance tasks.

The equipment has been developed for the following purposes:

- Top up of accumulator
- Top up and drainage of small ACU, SCS chiller and VCRU

PRODUCT FEATURES

- Simple manual operation, filling procedure via integrated hand pump
- No electrical supply required
- Control unit with:
- Colourless eloxated front panel
  - Imprinted hydraulic schematics
  - Resistant against mineral oils and other fuels
- Tank with filling point, venting deaeration filter, drain plug and sight glass for fill level control
- Pressure indication via pressure gauge on the operating plate, integrated hydraulic filter to clean the medium
- Laterally mounted retainers for the storage of the fill or drain hose
- Removable collecting reservoir to catch used medium
- Tow-bar with grip and towing eye for manual manoeuvering or transporting the device with an appropriate towing vehicle
- Connection to the A/C or its components in combination with the adapter kits (SCST1-AK350CU and SCST1-AK350GSP)

AVAILABLE ACCESSORIES

- Kit-Adapter GSP (SCS350) for top up accumulator, filling of whole system and draining of whole system
- Kit-Adapter CU (SCS240) for top up and drainage of small ACU, SCS Chiller and VCRU
- Tank with filling point, venting deaeration filter, drain plug and sight glass for fill level control
- Pressure indication via pressure gauge on the operating plate, integrated hydraulic filter to clean the medium
- Connection to the A/C or its components in combination with the adapter kits (SCST1-AK350CU and SCST1-AK350GSP)
- Laterally mounted retainers for the storage of the fill or drain hose
- Removable collecting reservoir to catch used medium
- Tow-bar with grip and towing eye for manual maneuvering or transporting the device with an appropriate towing vehicle

BENEFITS

- Airbus certified
- User friendly ergonomic setup and operation
- World-wide universal connection (compatible with multiple voltages)
- For hangar and outdoor usage
- Minimized service time
- On-site service

TECHNICAL SPECIFICATION

HANDPUMP-TOPUP

Model-No.		SCST1-TU
Nitrogen supply (requirements)	Pressure	Min. 6 bar (87 psi)
		Max. 200 bar (2.900 psi)
Main reservoir	Volume	30 l (7.9 gal)
	Usable volume	18 l (4.8 gal)
	Propylen glycol water (according to Airbus specification and not included in delivery)	
Operating conditions	Ambient temperature	–30 to +50 °C (–22 to +122 °F)
	Storage temperature	–30 to +60 °C (–22 to +140 °F)
	Rel. air humidity	5 to 90 % (non-condensing)

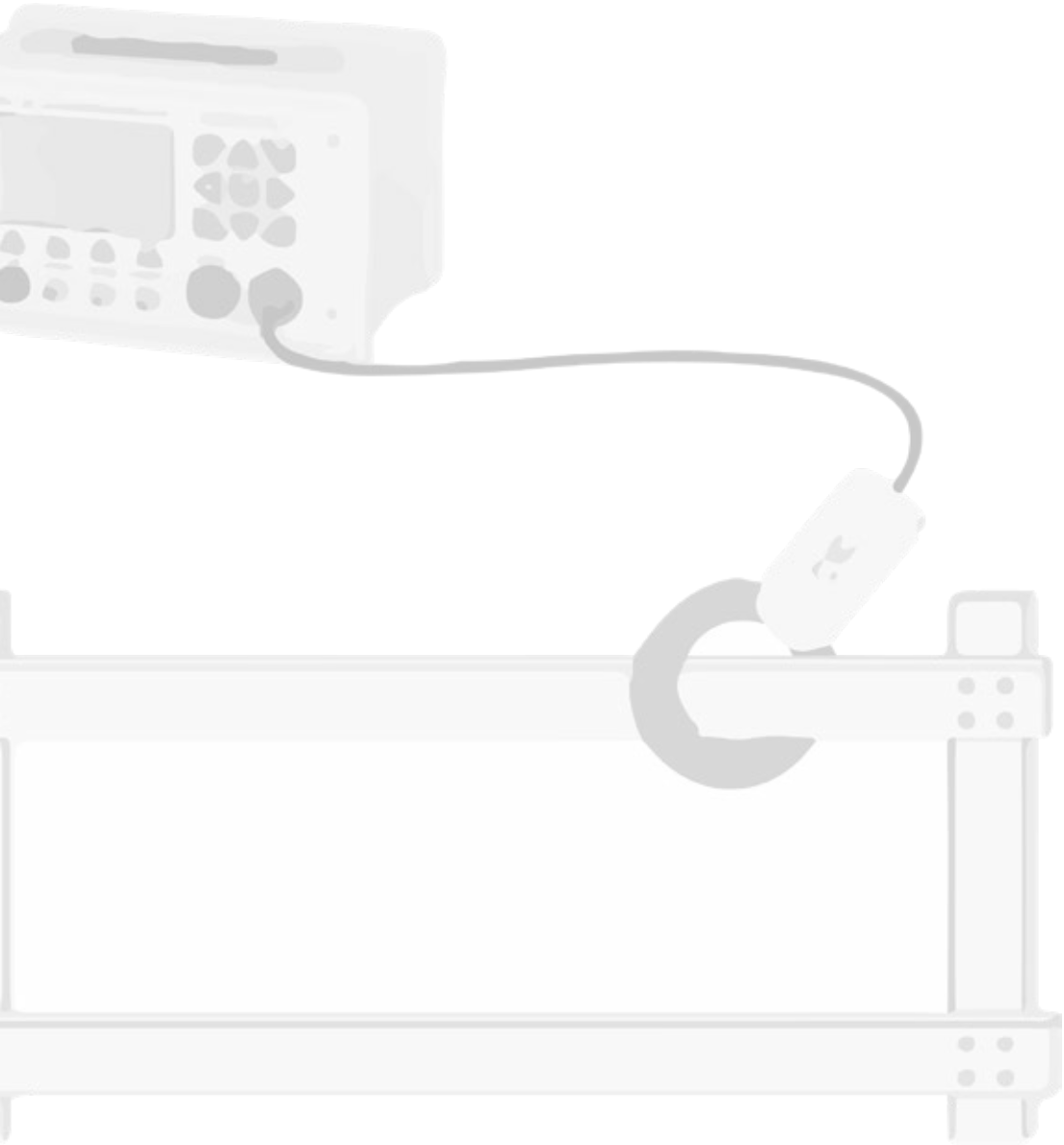

8

ELECTRICAL POWER
ATA CHAPTER 24

8 BONDING AND LOOP RESISTANCE TESTER

HYDRO PARTNER PRODUCT TESTFUCHS

DESCRIPTION

The equipment is developed as multifunctional bonding tester for Airbus A350. The tester in housed in a light and practical case with handle for easy handling. The high capacity accumulator ensures that the equipment can be used for long periods of time. A wide range of accessories is offered.

PRODUCT FEATURES

- Battery package (2 pcs accu)
- Power Supply Unit
- Shoulder strap type
- Connecting cable mini USB B-A 2 m

ADDITIONAL ACCESSORIES

- Small current injection clamp for single clamp and clamp-open detection and temperature sensor (CIC5)
- Big current injection clamp for single clamp and clamp-open detection and temperature sensor (CIC8)
- Voltage probes with extended tips
- Storage case
- Standard battery charger
- Battery package (2 pcs accu)
- Self test unit

OPTIONS

- High current / low current micro-ohmmeter (Option E)
- Loop resistance test (Option N)
- Single clamp measurement (Option Y)

TECHNICAL SPECIFICATION

BONDING AND LOOP RESISTANCE TESTER

Model-No.	BLRT2
Length	680 mm 26.8 inch
Width	530 mm 20.1 inch
Height	270 mm 10.6 inch
Weight	19.1 kg 42.1 lbs

9

EQUIPMENT / FURNISHING
ATA CHAPTER 25

9

CABIN INTERIOR ACCESS STAND

HYDRO PARTNER PRODUCT

DESCRIPTION

The Liftsafe DF071553-01 Cabin Interior Access Stand is ideal for use in the economy aisle and is designed to fit over most economy and some business class seats. It has been designed as a single worker unit with a capacity of 330 lbs. It is collapsible for easy carrying and storage. The ladder is of durable construction made primarily of structural aluminum with stainless steel hardware and a self-weight of only 25 lbs. Anti-slip ladder rungs ensure maintenance staff and employee safety during operation.

The Cabin Access Stand is ideal for ramp use and can easily be carried up ramp stairs.

The ladder is designed and tested in accordance with ANSI-ASC A14.7 and BS EN 131.7.

PRODUCT FEATURES

- Padding material
- 1 person movement
- Material type: Polished aluminum
- B737 access to cabin economy seats
- A350 access to cabin economy seats
- Collapsible
- Anti-slip ladder rungs
- Padding material equipped
- High grade materials
- Rigorous inspection and testing

BENEFITS

- Avoiding damages at passenger seats during maintenance
- Safety and reliability
- Ergonomic design
- Unrivalled quality and durability

TECHNICAL SPECIFICATION

	DF071553-01
Certifications	ANSI-ASC A14.7, BS EN 131.7
Dimensions (shipping)	419 mm x 1,209 mm x 918 mm x 55 kg 16.5 inch x 47.6 inch x 36.1 inch x 25 lbs
Height	lowered: 1,209 mm 47.6 inch
Foot Print	419 mm x 918 mm 16.5 inch x 36.1 inch

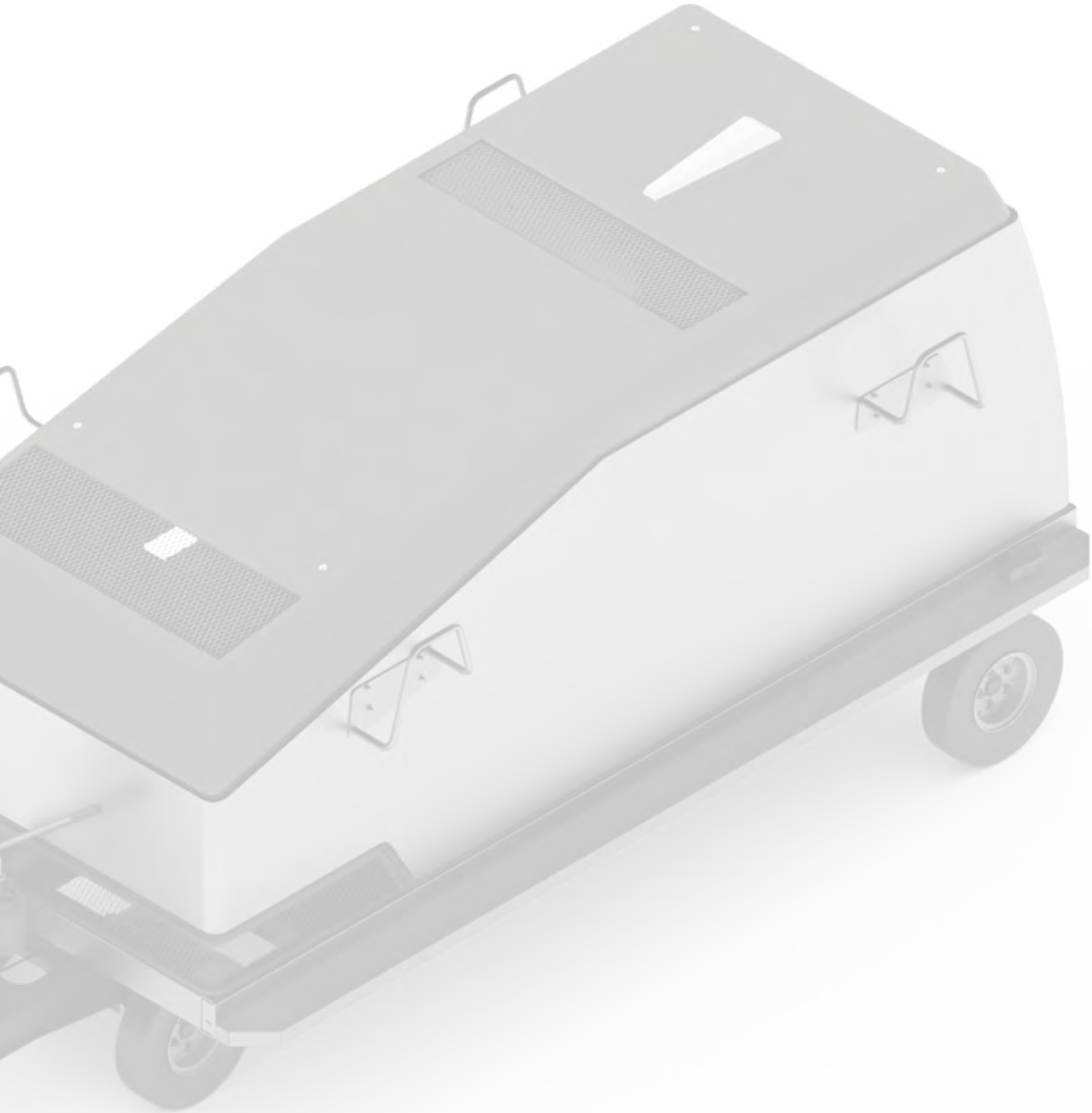

10

HYDRAULIC POWER

ATA CHAPTER 29

10.1 HYDRAULIC GROUND POWER UNIT

HYDRO PARTNER PRODUCT TESTFUCHS

DESCRIPTION

Hydraulic Ground Power Units are mainly used inside the hangar. A crucial factor for these operators is the noise. With a noise level of 72 dB, full load, at a distance of 1 meter makes communication hassle-free.
The well-engineered design of the hydraulic cart has many advantages. One of the highlights is its clean functioning.
The hydraulic installations and the cooling are separated. Therefore it is impossible that Skydrol contaminates the environment.
Neither the aircraft nor the operator will suffer from oil contamination, saving a lot of time and hassle in cleaning processes.

PRODUCT FEATURES

- Electric or Diesel power
- Single or dual circuit
- Easy pressure control using the 0psi, 3000 psi / 5000 psi push buttons as applicable
- Free from Skydrol vapours
- Automatic over-temp protection
- Separate low pressure circuit for anti-cavitation
- Entire life cycle support and spares
- Special low pressure circuit guarantees constant cleaning and cooling of hydraulic medium
- Very suitable hydraulic supply for "Ram Air Test Ground Checks"
- Simple but sophisticated design
- Ramp function for soft pressure build-up
- Pressure and flow rates are infinitely variable and limitable
- Waterproof cover made of GRP, Skydrol resistent OEM quick disconnect couplings available
- Leakage measurement 0.08 to 5.3 US gpm (0.32 to 20 lpm)
- Change the filter only upon indication
- Customer specific color options
- Maximum towing speed is 15 mph (25km/h)
- The costumer can choose whatever matches his requirements:
  - A wide range of options and accessories are available
  - In addition, any customer special wishes will be respected
- Digital Display
- Overview the status of your unit at one glance
- Userfriendly menu-guided operation
- Switch between different measuring units (e.g celsius or fahrenheit, liter or gallon)
- Switch easily between different languages
- Take advantage of different user privileges
- Errors are displayed in comprehensive text
- Collect error alarms and create alarm-lists

OPTIONS

FLOW MEASUREMENT WITH DIGITAL INDICATOR

- Single system 2 to 66 US gpm (10 to 250 l/min), ±1 % of full scale
- Dual system (independent) 1.3 to 42 gpm (5 to 160 l/min)

LEAKAGE MEASUREMENT

- 0.08 to 5.3 US gpm (0.32 to 20 l/min), ±1 % of full scale
- 0.11 to 10.6 US gpm (0.40 to 40 l/min), ±1 % of full scale

BENEFITS

- User friendly ergonomic setup and operation
- Worldwide support locations
- Expert support
- On-hand spares
- Extended warranty
- Fleet support programs available
- Easy calibration
- World-wide universal connection (compatible with multiple voltages)
- For hangar and outdoor usage
- Certified for all Airbus aircraft

TECHNICAL SPECIFICATION

HYDRAULIC POWER

Model-No.	Electric Motor driven	Diesel engine driven
Dimension	3,800 mm x 1,800 mm x 1,700 mm 149.6 inch x 70.9 inch x 66.9 inch	4,600 mm x 1,800 mm x 2,100 mm 181.1 inch x 70.9 inch x 82.7 inch
Weight	2,500 kg	3,200 kg
Operating ambient temperature	-25 to +45 °C -13 to +113 °F	-25 to +45 °C -13 to +113 °F
Noise emission	max. 75 dB at 1 m distance	Approx. 84 dB (A) at control panel
Electrical supply	3/PE AC 50-60 Hz 400 V	-
Power	Approx. 86-104 kVA	-
Measurement accuracy		
Supply pressure (analog)	0-5,800 psi (0-400 bar), cl. 1 (EN 837)	
Return pressure (analog)	0-145 psi (0-10 bar), cl. 1.6 (EN 837)	
Oil temperature indicator	0-100 °C	
Flow measurement	single circuit 0.08-66 gpm (0.32-250 lpm) ±1 % of full scale dual circuit 0.08-42 gpm (0.32-160lpm) ± 1% of full scale	
Filter	3 micron in filling circuit, 6 micron in each low and high pressure circuit, 25 micron in return	
Depending on the type of equipment, the following hydraulic oils can be used	Phosphate-ester hydraulic Oil ("Skydrol" or "Hyjet") or mineral oil based hydraulic oil ("MIL-H-5606", "MIL-H-83282", "MIL-H-87257)	

10.2 TEST EQUIPMENT FOR RAM-AIR TURBINE

HYDRO PARTNER PRODUCT TESTFLIGHT

DESCRIPTION

The test equipment is developed to drive the RAM-AIR turbine of the Airbus A350 during RAT-testing.

PRODUCT FEATURES

- RAT-Motor
- Hoses for supply, leakage and return
- Storage box

BENEFITS

Certified according to Tool/ Equipment Bulletin No: 350-C9003 TEB Issue No. 2.

TECHNICAL SPECIFICATION

TEST EQUIPMENT FOR RAM-AIR TURBINE

MOTOR	RATMK350
Medium	Phosphate Ester based Hydraulic Fluid Skydrol/Hyjet
Rated pressure	350 bar (5.000 psi)
Speed	3500 rpm (continuous)
Max. speed	4633 rpm (intermittent)
Torque	min. 130.3 Nm (1600 in-lb) at 4633 min-1
Inlet temperature	-30 to 100 °C (-22 to 212 °F)
Flow	max. 185.5 l/m (48.8 gpm) at 4633 rpm
Sense of rotation	CW

HOSES	RATMK350
Hose length	approx 6,000 mm (236.2 inch)
Couplings	Coupling kit CK002M, suitable for 5000 psi Hydraulic Ground Power Unit

DIMENSIONS AND WEIGHT (MOTOR)	RATMK350
Width	200 mm (7.9 inch)
Depth	325 mm (12.8 inch)
Height	214 mm (8.4 inch)
Weight	approx 25 kg (61 lbs)

DIMENSIONS AND WEIGHT (STORAGE BOX)	RATMK350
Width	1,260 mm (49.6 inch)
Depth	1,060 mm (41.7 inch)
Height	690 mm (27.2 inch)
Weight	approx 93 kg (205 lbs)

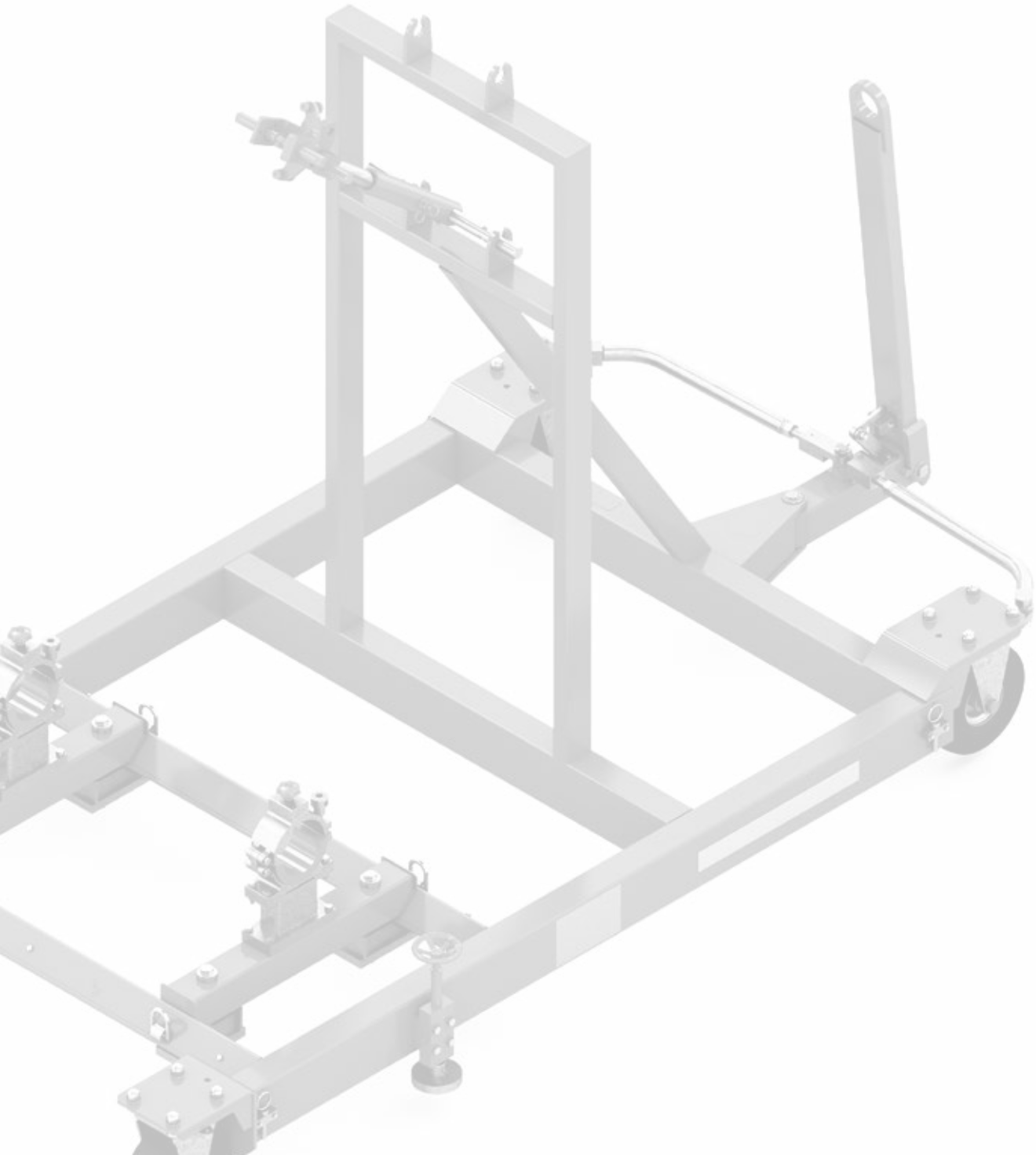

11

LANDING GEAR
ATA CHAPTER 32

11.1 WHEEL AND BRAKE CHANGE EQUIPMENT (UNIVERSAL)

DESCRIPTION

Hydraulic wheel trolley for removal of wheels and brake drums on aircraft.

PRODUCT FEATURES

- Flexible and ergonomic wheel trolley for the easy removal of wheels and brake drums
- High lifting height (710 mm) makes it ideal for lifting e.g. wheels and brake drums off a transport wagon
- Adjustable lifting arms for wheel sizes ø 270 – 1300 mm
- Lifting arms with roller bearings for easy rotation of wheel into correct position
- Pedal operated pump leaving both hands free for working
- Hand operated dead man's release for optimum safety whilst lowering
- 2 swivel castors and two 360° revolving castors
- Skydrol-resistant paint; standard color: yellow RAL 1028

AVAILABLE ACCESSORIES

Crane boom (WTK)

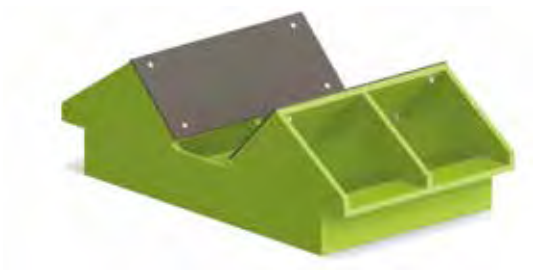

Bracket support assembly (24010-031-000)

BENEFITS

- User friendly ergonomic setup and operation
- Universal application
- On-site service

TECHNICAL SPECIFICATION

WHEEL AND BRAKE CHANGE EQUIPMENT (UNIVERSAL)

Model-No.	WTA500AP
Nominal load	500 kg 0.4 tons
Device height	1,198 mm 47.2 inch
Lifting height	710 mm 28 inch
Wheel diameter	270 – 1,300 mm 10.6 - 51.2 inch
Application	Most of all narrow- and wide-body aircraft, except B737

11.2 WHEEL AND BRAKE CHANGE EQUIPMENT

DESCRIPTION

Hydraulic wheel trolley for removal of wheels and brake drums on aircraft.

PRODUCT FEATURES

- Flexible and ergonomic wheel trolley for the easy removal of wheels and brake drums
- Fixed lifting arms
- Chain for easy securing of wheel during handling and transportation
- Hand operated lifting spindle
- 4 swivel castors
- Skydrol-resistant paint;
  standard color: yellow RAL 1028

AVAILABLE ACCESSORIES

- Tow-bar
- Crane boom

Bracket support assembly (24010-031-000)

BENEFITS

- User friendly ergonomic setup and operation
- Universal application
- On-site service

TECHNICAL SPECIFICATION

WHEEL AND BRAKE CHANGE EQUIPMENT

Model-No.	MH12-005
Nominal load	260 kg 0.286 tons
Device height	1,103 mm 43.4 inch
Lifting height	700 mm 27.6 inch
Wheel diameter	950 mm - 1,500 mm 37.4 inch - 59 inch
Airbus applications	A300 A310 A320 Family A330 A340–200/ –300/ –500/ –600 **A350–900/ -1000**
Boeing applications	B707 B727 B757 B767 B777 B787
Others	DC–10 MD–11 L–1011 IL–96

11.3 LANDING GEAR TRANSPORTATION TROLLEY

DESCRIPTION

HYDRO Landing Gear Dolly has been specially designed for transportation and storage of A350-800/ -900 main landing gears.

PRODUCT FEATURES

- Rigid steel frame
- Tow-bar for easy towing and moving
- 2 swivel and 2 fixed castors
- 4 landing gear clamps
- Skydrol-resistant paint

AVAILABLE ACCESSORIES

- Frame for MLG transportation with brakes and wheels

BENEFITS

- User friendly ergonomic setup and operation
- Universal application
- On-site service

TECHNICAL SPECIFICATION

LANDING GEAR TRANSPORTATION TROLLEY

Model-No.	LGD08
Nominal load / MLG	4,500 kg 9920 lbs
Max. width	2,300 mm 90.5 inch
Max. length (parking position)	2,900 mm 114.1 inch
Max. length (towing attitude)	4,400 mm 173.2 inch
Max. height	690 mm 27.1 inch
Weight	496 kg 1,093 lbs
Min. bend radius	3,000 mm 118.1 inch
Max. speed of truck during transport	20 km/h 12.43 mph
Application	A350-900/ -1000 (MLG)

11.4 MAIN LANDING GEAR INSTALLATION TROLLEY

DESCRIPTION

HYDRO Main Landing Gear Trolley has been specially designed for removal and installation of the main landing gear. Due to the u-shaped base, the installation pallet is picked up directly from the floor without the requirement of using of an overhead crane. To save time during assembly of the A350, the rivet process of the wing and the assembly of the landing gear are handled simultaneously. This required precise installation movements during the assembly. The fitting of the landing gear hence can be performed without additional load application.

PRODUCT FEATURES

- Flexible and ergonomic wheel trolley for the easy removal of wheels and brake drums
- Skydrol-resistant paint

BENEFITS

- User friendly ergonomic setup and operation
- Universal application
- Time and cost saving
- On-site service

TECHNICAL SPECIFICATION

MAIN LANDING GEAR TROLLEY

Model-No.	MLGT57
Nominal load	6,000 kg 6 t
Max. height	2,260 mm 89 inch
Max. length	5,252 mm 206.8 inch
Max. width	3,760 mm 148 inch
Application	A350–900/–1000 (MLG)

11.5 AIRCRAFT WHEEL CHOCKS

HYDRO PARTNER PRODUCT
NEWBOW AEROSPACE

DESCRIPTION

The aircraft wheel chocks are manufactured from a solid rubber extrusion and feature a weather-resistant hand rope along with high visibility strips on each face of the chock.

PRODUCT FEATURES

- Solid rubber
- Heavy duty
- 1-metre hand rope
- High visibility strip on all 3 sides
- None slip design

BENEFITS

- Easy to handle
- Solid rubber extrusion
- Visible at night
- Suitable for all wheel size

TECHNICAL SPECIFICATION

AIRCRAFT WHEEL CHOCKS

Model-No.	NBWC-6	NBWC-9
Weight	12 kg wheel chock	6 kg wheel chock
Variant	Suitable for medium / large wheels	Suitable for small / medium size wheels
Dimensions	250 mm x 220 mm x 235 mm 9.8 inch x 8.7 inch x 9.3 inch	250 mm x 170 mm x 150 mm 9.8 inch x 6.7 inch x 5.9 inch

11.6 AIRCRAFT WHEEL & TYRE HANDLING

HYDRO PARTNER PRODUCT
NEWBOW AEROSPACE

DESCRIPTION

The mobile aircraft wheel handling dolly is designed to facilitate the storage and transportation of aircraft wheels or tyres. Offered as a single or double bay unit, the operator can easily place one or two wheels inside the frame for safe handling and manoeuvring. Equipped with four castor wheels (rear swivelling with footbrake) and a heavy duty low-level loading tray, the task can be undertaken by a single person.

The aircraft wheels can be fully secured into the frame by positioning the drop-fit bar into the locators. Additional straps and restraints are not required. The unit is suited to the hangar or airport environment and offers additional user health & safety compliance when handling heavy aircraft wheels or tyre.

PRODUCT FEATURES

- Safe & efficient handling and moving of aircraft wheels & tyres
- Available as a single or double bay unit
- Fully mobile
- Heavy-duty low-level loading tray for one person use
- Castor wheels (rear swivelling with foot brake)
- Powder coat finish (RAL 1028 standard)
- Available to cover all size aircraft wheels and tyres
- Single or double wheel handling
- Manual handling health & safety compliant

BENEFITS

- One person use
- Easy transportation of wheels or tyres

TECHNICAL SPECIFICATION

AIRCRAFT WHEEL & TYRE HANDLING

Wheel handling dolly	Varient	Measurement
NBWS-2WB	2-Bay wide-body wheels	540 mm x 1,390 mm x 1,200 mm 21.3 inch x 54.7 inch x 47.2 inch
NBWS-1WB	1-Bay wide-body wheel	1,540 mm x 720 mm x 1,200 mm 60.6 inch x 28.3 inch x 47.2 inch
NBWS-2NB	2-bay narrow-body wheels	440 mm x 620 mm x 1,200 mm 17.3 inch x 24.4 inch x 47.2 inch
NBWS-1NB	1-Bay narrow-body wheel	1,440 mm x 620 mm x 1,200 mm 56.7 inch x 24.4 inch x 47.2 inch

11.7 AIRCRAFT STRUT & ACCUMULATOR SERVICE TOOL

HYDRO PARTNER PRODUCT NEWBOW AEROSPACE

DESCRIPTION

The aircraft strut service tool is fully universal and can be used with any make and model aircraft.

The 800 psi and 3500 psi gauge features a pre-use accuracy check, Perspex lens and protective rubber cover. Equipped with a 2-meter length inflation hose allows the operator to undertake the desired high-pressure inflation task whilst remaining at a safe and secure working distance. The unit consists of an inlet flow isolation valve with none return valve and an additional excess pressure valve, allowing optimum inflation pressures to be achieved.

PRODUCT FEATURES

- Calibrated accuracy ±1 %
- EN837-1 Compliant
- Single scale dial
- Up to 3500 psi working pressure
- 100 mm diameter gauge
- Shatter proof lens
- Inflation & deflation capability
- Pre-use accuracy check
- Released with calibration test certificate

OPTIONS

- "Night glow" dial face which automatically illuminates the dial during dark environments
- Customer specific inflation hose lengths can be offered

BENEFITS

- Accurate strut inflation
- Easy operator visibility when in use
- Accurately adjustable pressures
- Safe working distance

TECHNICAL SPECIFICATION

AIRCRAFT STRUT & ACCUMULATOR SERVICE TOOL

Model-No.	SIC8000-001	SIC3500-001
Variant	Low Pressure Strut & Accumulator Service Tool	High Pressure Strut & Accumulator Tool
Pressure Range	0-800 psi	0-3500 psi

11.8 LANDING GEAR ACCESS STAND

HYDRO PARTNER PRODUCT

DESCRIPTION

This Landing Gear Access Stand is built to handle all wide-body landing gear and nose gear applications. The Landing Gear Access Stand provides safe access to all maintenance locations of the main and nose landing gear. The base frame is designed to adjust to most wheel assembly configurations on main and nose landing gear. The hydraulic height adjustment, one hand lateral operation and full swivel and lock casters allow single technician placement and use.

PRODUCT FEATURES

- Access points at A350 Main Gear, Main Gear Wheel Well, Nose Gear, Bulk Cargo, and Static port inspection/ replacements.
- Anti slip, anti-fatigue ladder rungs
- Corrosion-resistant powder coat finish for longevity
- For increased safety and ease of mobility, the stand comes equipped with 4 corner-levellingjacks
- Designed and tested in accordance with ANSI-ASC A14.7 and BS EN 131.7
- Paddling material equipped
- Fall restraint anchor points on the upper ladder
- Controls: Hydraulic foot pump
- Ergonomic design
- High-grade materials
- One person movement
- Powder coated finish

AVAILABLE ACCESSORIES

- Air-powered pump
- Utilities package
- side mount tow-bar
- Lift truck fork pockets

BENEFITS

- Safety and reliability
- Ergonomic Design
- Unrivalled quality and durability
- Flexibility for use on a wide range of Airbus, Boeing and Embraer aircraft
- Rigorous inspection and testing
- Small footprint and greater geometry
- Designed according ANSI-ASC A14.7 and BS EN 131.7

TECHNICAL SPECIFICATION

LANDING GEAR ACCESS STAND

Model-No.	DF071592-04
Material type	Ladder: Steel Frame: Steel
Certifications	ANSI-ASC A14.7, BS EN 131.7
Dimensions (shipping)	2,210 mm x 2,438 mm x 499 kg 87 inch x96 inch x 1,100 lbs
Height	Low: 2,178 mm / 85.8 inch Extended: 3,534 mm / 139.1 inch
Foot Print	2,210 mm x 2,438 mm 87 inch x 96 inch

11.9 HYDRAULIC UNIT

DESCRIPTION

Hydraulic tool used for compression of MLG strut to allow removal, installation and servicing of MLG.

TECHNICAL SPECIFICATION

Model-No.	AIT320020-001
Aircraft Application	A350-900 / -1000
Application	n/a

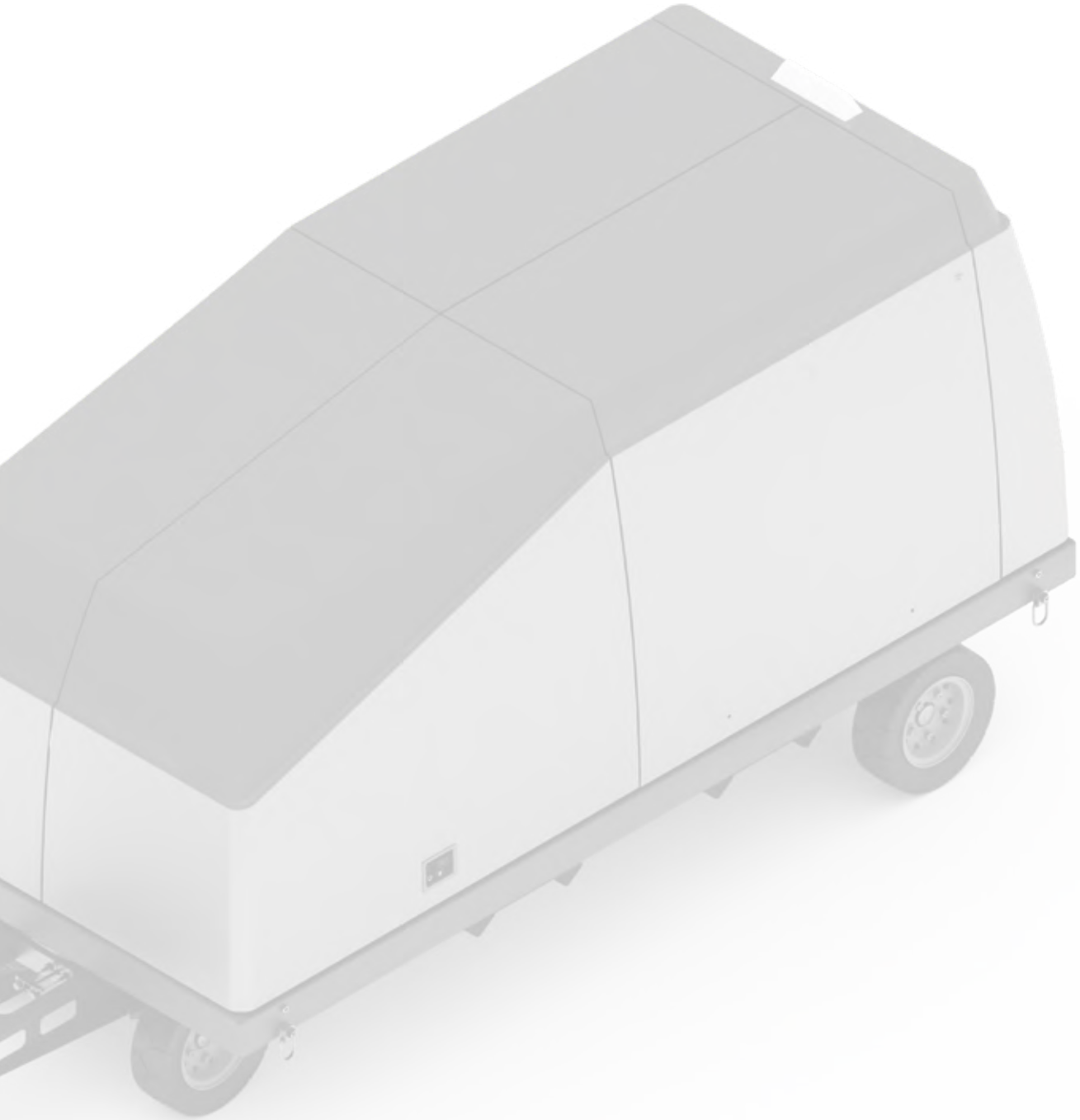

12

WATER / WASTE

ATA CHAPTER 38

12.1 WASTE LINE CLEANING

HYDRO PARTNER PRODUCT TESTFUCHS

DESCRIPTION

The importance of proper vacuum waste tube maintenance is obvious; to avoid unscheduled events and lavatory malfunctions.

The Waliclean has been developed as full automatic vacuum waste line cleaning systems for a whide range of aircraft types. WALICLEAN is the outcome of a joint development project of Austrian Airlines (Lufthansa Group), vacuum waste tube maintenance technicians (inventors) with decades of specific work experience and TEST-FUCHS a leading manufacturer of high-tech GSE and aerospace test equipment.

The main targets of the development have been a very cost effective opperation (without the need of costly special chemicals), a easy and fast processing and in a safe and predictable way (best possible cleaning results independent of operator experience).

After pushing "start" no further action required until cleaning is completed - A cleaning during overnight stops is possible.

PRODUCT FEATURES

- Fully automatic cleaning process (no monitoring required)
- Automatic leakage test of vacuum waste line system before cleaning process start-up
- Implementation during standard maintenance tasks (e.g. Line Maintenance Check)
  Preselectable cleaning time enables high flexibility, perfect cleanliness is provided within a few hours
- Implementation for already significantly clogged waste lines as well as for preventive cleaning
- Environmental friendliness is ensured by usage of water and citric acid as cleaning agents
- 2 electronically controlled pumps
- 2 pressure sensors (supply and return)
- Large heated reservoir (100 gal)
- Permanent automatic observation and regulation of the pressure (vacuum)
- Automatic change of flow direction (wide-body)
- Concurrent cleaning of two systems (wide-body)
- Heated HEPA (High-efficiency particulate absorption) filter for reservoir air vent

OPTIONS

- Extended functionality for upper deck and simultaneous cleaning of two systems
- Continuous-flow heater (Option B)
- Motor drive for hose reel (Option C)
- Tool box with drawer and storage shelf for citric acid (Option D)
- Spring-loaded chassis (Option E)
- Cover paint alternative to standard (Option F)
- Connection for waste service truck (Option G)
- Drain pump (Option H)

AVAILABLE ACCESSORIES

- Dust cover
- Additional waste water hose 10 m (33 ft) with couplings and caps, stored in a separate shelf between the fork lift access points

BENEFITS

- Cleaning during overnight stops is possible
- User friendly ergonomic setup and operation
- Environmental friendliness
- Fully automatic cleaning process
- Minimized service time
- On-site service
- Everything needed is included/stowed on the WLC1
- Certified for the use on A320 (all), A330/ A340 (all) A350 (all), A380 (all)

TECHNICAL SPECIFICATION

WASTE LINE CLEANING

Model-No.		WLC1
Operating conditions	Ambient temperature	5 to 40°C (41 to +104 °F)
	Storage temperature	0 to 60°C (32 to +140 °F)
	Noise emission	max. 63 dB (A) in 1 m distance
Electrical supply	Mains supply	3/PE AC 50/60 Hz 380 – 480 V
	Nominal current	max. 21 A (max. 32 A with option B)
	Power	14.6 kVA (max. 22.1 kVA with option B)
	Preliminary fuse (electricity- and performance characteristcis at 400 V 50 Hz)	25 A gL (max. 32 A gL with option B)
Dimensions and weight	Dimension	3,514 mm (3,700 mm with option G) x 1,413 mm x 1,654 mm 138.3 inch (145.7 inch with option G) x 55.6 inch x 65.1 inch
	Weight	approx. 1,200 kg (approx. 2,645.5 lbs)

12.2 MOBILE LAVATORY VACUUM BLOCKAGE REMOVER

HYDRO PARTNER PRODUCT TESTFLIGHT

DESCRIPTION

No more grounding of the A/C - The Vacuum Toilet Blockage Remover is an all-purpose equipment to clear and remove pipeline blockage of vacuum-lavatory systems on aircraft. It has been developed for daily use after the aircraft returns from a flight and reports a blockage. By negative pressure the blockage in the waste line can be sucked out. The system requires short time and reduces the downtime of aircraft.

PRODUCT FEATURES

- All-purpose equipment to clear and remove pipeline blockage of vacuum-lavatory systems on A/C
- By negative pressure the blockage in the waste line will be removed
- Flexible by setup on a car trailer
- Connection for tank drainage with waste service truck
- For indoor and outdoor use
- Unit prepared for worldwide operation (universal motor)
- Big reservoir for several applications
- Unit can be used either in electric mode or diesel mode
- Diesel aggregate gives independence of electric supply
- Simple, manual operation

BENEFITS

- Cleaning during overnight stops is possible
- User friendly ergonomic setup and operation
- Environmental friendliness
- Fully automatic cleaning process
- Minimized service time
- On-site service
- Everything needed is included/stowed on the WLC1
- Certified for the use on A320 (all), A330/ A340 (all), A350 (all), A380 (all)

OPTIONS

Transport options:

- Standard chassis
- Trailer platform
- Installation into van

AVAILABLE ACCESSORIES

Included in the scope of delivery:

Accessory adapter waste tank drain:

- Adapter 4 inch waste drain and 2 x 2 m 4 inch suction hose with DN100 integration

TECHNICAL SPECIFICATION

MOBILE LAVATORY VACUUM BLOCKAGE REMOVER

Model-No.		VTBR2
Dimensions		4,200 mm x 1,860 mm x 2,050 mm 165.4 inch x 73.2 inch x 80.7 inch
Weight		approx. 1350 kg / 2.976 lbs
Operating ambient temperature		5 to 40 °C 41 to 104 °F
Storage temperature		0 to 60 °C 32 to 140 °F
Air humidity		5 to 90 % (non-condensing)
Altitude		max. 2,600 mmSL (8,530 ft)
Mains supply		3/Pe AC 50/60Hz 380-480 V
Power		3.7 kVA
Performance of vacuum pumps		-0.3 to -0.85 bar
Tank volume		300 l 79 USgal
Diesel-engine electrical generator	Stroke	4,340 mm 170.9 inch
	Rotation Speed	Rot. Speed 3000 U/min
	Consumption	Approx. 1.94 l/h (0.5 gal)
Tank content		24 l 6 gal
Performance		5.6 kVA

12.3 PORTABLE WATER TEST EQUIPMENT

HYDRO PARTNER PRODUCT TESTFUCHS

DESCRIPTION

The equipment is developed for pressure tests in the Airbus A350 XWB piping system.

BENEFITS

- Simple operation
- Quick release connection on equipment side
- Pressure compensation valve on control panel
- Storage room in the cover
- Easy maintenance

TECHNICAL SPECIFICATION

PORTABLE WATER TEST EQUIPMENT

Model-No.	PWTE1
Pneumatic supply (requirements)	Pressure: Max. 200 bar (max. 2,900.8 psi)
Electrical supply (requirements)	Mains connection: 1/ n/ PE AC 50/ 60 Hz 110-250 V Nominal current: 0.5 A Power: 0.12 kVA
Measurements	Pressure: 0 to 10 bar (0 to 145 psi) Class 0.5 Temperature: 0 to 100 °C (0 to 212 °F) ± 1 °C (±1.8 °F)
Operating conditions	Operating temperature: 5 to 35 °C (41 to 95 °F) Storage temperature: 0 to 60 °C (32 to 140 °F) Relative humidity: 5 to 95 %
Dimensions and weight	Width: 583 mm (23.0 inch) Depth: 483 mm (19.0 inch) Height: 400 mm (15.7 inch) Weight: 35 kg (70.5 lbs)

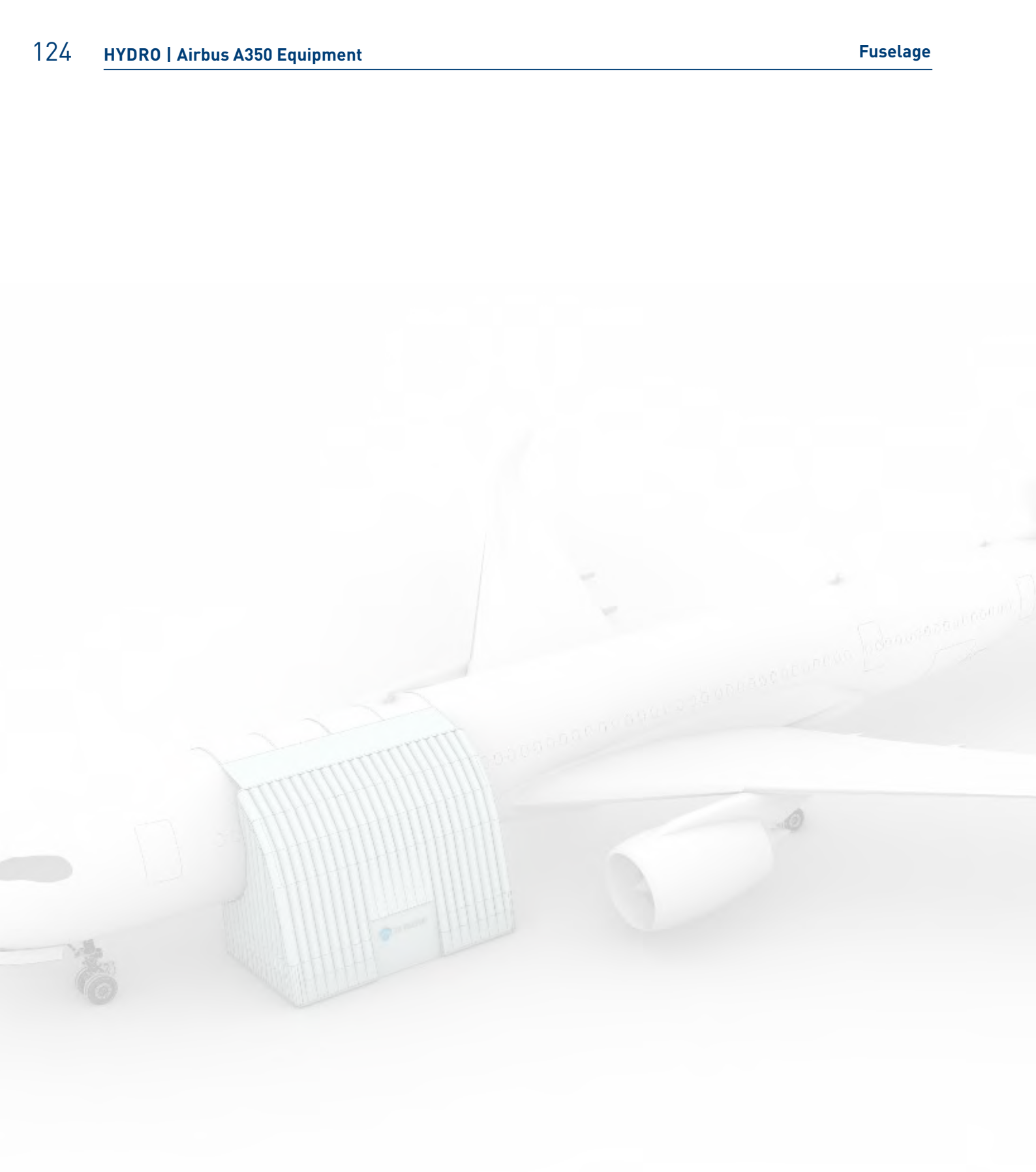

13

FUSELAGE
ATA CHAPTER 53

13.1 IglooMX FUSELAGE SHELTER

HYDRO PARTNER PRODUCT
JB ROCHE

DESCRIPTION

The patent protected IglooMX Fuselage Shelter is the ideal tool for fuselage repair tasks.

This shelter can be "docked" to the damaged portion of the fuselage to create a fully controlled environment. It is also a very useful tool when any maintenance work is being undertaken in the cargo bay or for repairs around the door entry areas.

The IglooMX Fuselage Shelter is designed to provide a "hand-in-glove" fit against the fuselage. It is supplied with flexible fabric flanges that can be taped to the body of the aircraft to prevent any ingress of dust or moisture. A similar seal is created between the base tubes of the shelter and the ground.

In addition to composite repair work the fuselage shelter may be used for window repairs, paint work and aircraft livery.

These shelters feature specially designed fabrics that are both lightweight and tough, providing excellent abrasion and tear resistance. The unique materials are also fire retardant and resistant to hydraulic fluid and fuels, ensuring that they remain functional for many years.

The IglooMX kit can be inflated in under 5 minutes and deflated and stored away in approximately 20 minutes.

PRODUCT FEATURES

- Installation Crew: 4 persons
- Inflation Time: 5 minutes
- Folding and re-packing time: 20 minutes
- Strong but lightweight for easy handling
- Fire Retardant and resistant to fuels, oils and hydraulic fluids
- Unique patented design
- Withstand wind speeds of up to 25 knots
- 20 year proven track record with leading airlines, airframers and MRO's

AVAILABLE ACCESSORIES

- Dehumidification
- Temperature control
- Positive pressure control
- Lighting kit (only required for night time work as the shelter fabric allows for very good light transmission)
- Air-conditioning
- Air-filtration package
- Water filled ballast bag kit

BENEFITS

- Universal application
- Cost savings
- Space savings
- On-site service

TECHNICAL SPECIFICATION

WIDEBODY FUSELAGE IGLOOMX SHELTER

Model-No.	890146	890114
Dimensions (stored)	1,700 mm x 1,100 mm x 1,000 mm 67 inch x 43 inch x 39.4 inch	1,400 mm x 1,100 mm x 1,000 mm 55 inch x 43 inch x 39.4 inch
Dimensions (setup)	8,100 mm x 6,100 mm x 7,500 mm 318.9 inch x 240 inch x 295 inch	6,100 mm x 6,100 mm x 7,500 mm 240 inch x 240 inch x 295 inch
Packaged weight	280 kg 617.3 lbs	220 kg 485 lbs
Ambient temperature	-30 °C to +70 °C 22 °F to +158 °F	-30 °C to +70 °C 22 °F to +158 °F
Power supply	can be powered from a generator or 110 V/ 220 V ground power supply	can be powered from a generator or 110 V/ 220 V ground power supply
Applications	**A350** A330 B787	**A350** A330 B787

13.2 IglooMX NOSE SHELTER

HYDRO PARTNER PRODUCT
JB ROCHE

DESCRIPTION

When your aircraft has been damaged by a bird-strike, lightning-strike or a collision on the apron, it can take a considerable amount of time to source an available hangar to undertake the necessary repairs. The patent protected IglooMX Inflatable Nose Shelter system provides the ideal solution for such events. This "hangar-in-a-bag" system reduces downtime to a minimum and saves time and money on hangar space rental and towing charges. The Nose Shelter may be used for multiple purposes including windshield replacement, radome composite repairs and nose landing gear maintenance or replacement. The IglooMX is small enough to ship as part of the fly-away kit. It is inflated and "docked" around the front of the aircraft by following the simple installation instructions provided. Inflation takes less than 5 minutes with a crew of 4-6 people. The Nose Shelter has plenty of space internally for scaffolding, scissors-lift or boom-lift and is supplied complete with heating and filtration ducts. Once in place, the shelter system will boost your maintenance team's productivity by providing a warm and safe environment in which to work. These shelters feature specially designed fabrics that are both lightweight and tough, providing excellent abrasion and tear resistance. The unique materials are also fire retardant and resistant to hydraulic fluid and fuels, ensuring that they remain functional for many years. The IglooMX kit can be deflated and stored away in approximately 20 minutes.

PRODUCT FEATURES

- Installation Crew: 4-6 persons
- Inflation time: 10 minutes
- Folding and re-packing time: 20 minutes
- Strong but lightweight for easy handling
- Fire retardant and resistant to fuels, oils and hydraulic fluids
- Unique patented design
- Can withstand windspeeds of up to 25 knots
- 20 year proven track record with leading airlines, airframers and MRO's

BENEFITS

- Can be branded with airline logo
- No previous training required
- Provides privacy from passengers during maintenance

AVAILABLE ACCESSORIES

- Ramp heater
- Air-conditioning
- Lighting set on tripods
- Reusable shipping crate
- Water filled ballast bag kit
- Camcleaner Air-Filtration package
- Dehumidifier package

TECHNICAL SPECIFICATION

NOSE SHELTER

Model-No.	890115
Dimensions (packed)	1,800 mm x 1,300 mm x 1,200 mm 70.9 inch x 51 inch x 47 inch
Dimensions (setup)	11,400 mm x 6,500 mm x 8,400 mm 449 inch x 256 inch x 330.7 inch
Packaged weight	315 kg 694.5 lbs
Ambient temperature	-30 °C to +70 °C 22 °F to +158 °F
Inflation device	2 H.P. Electric Blower
Power supply	110 V or 220 V models available
Applications	**A350** A330 B787

13.3 IGLOOMX COMP SHOP MOBILE

DESCRIPTION

At JB Roche they have been designing and building inflatable maintenance shelters for more than 20 years. Their patented IglooMX Shelters are engineered specifically to suit the needs of the aviation sector and their products are used all over the world to combat the effects of both hot and cold weather as well as dust, snow, sand and rain. The shelters provide airlines, MRO's, militaries and aircraft builders a simple and effective solution to protect workers and sensitive equipment against bad weather. We offer an extensive range of models to suit most types of aircraft and maintenance requirement.

PRODUCT FEATURES

- Air filtration system
- Dehumidifier
- On-Site repair kit
- Installation instructions
- Integral groundsheet
- Installation Crew: 2 people, no previous training required
- 12 months parts and labour warranty
- Extremly high strength-to-weight ratio
- Unique FR fabrics

OPTIONAL ACCESSORIES

- Add-on transition pieces to accommodate large parts
- Replacement blower
- Lighting package
- ECU (heating & cooling)
- External groundsheet

TECHNICAL SPECIFICATION

COMPSHOP MOBILE

Model-No.	890151
Dimensions (stored)	1,200 mm x 1,000 mm x 1,000 mm 47.2 inch x 39.4 inch x 39.4 inch
Dimensions (setup)	6,400 mm x 5,280 mm x 3,350 mm 252 inch x 207.9 inch x 131.9 inch
Inside dimensions main room	20 square meters: 4,000 mm x 5,000 mm x 2,800 mm 157.5 inch x 196.9 inch x 110.2 inch
Inside dimensions entry area	4 square meters: 2,000 mm x 2,000 mm x 2,300 mm 78.7 inch x 78.7 inch x 90.6 inch
Packaged weight	175 kg 385.8 lbs
Ambient temperature	-30 °C to +70 °C -22 °F to +158 °F
Inflation device	Electric blower 110 V or 220 V

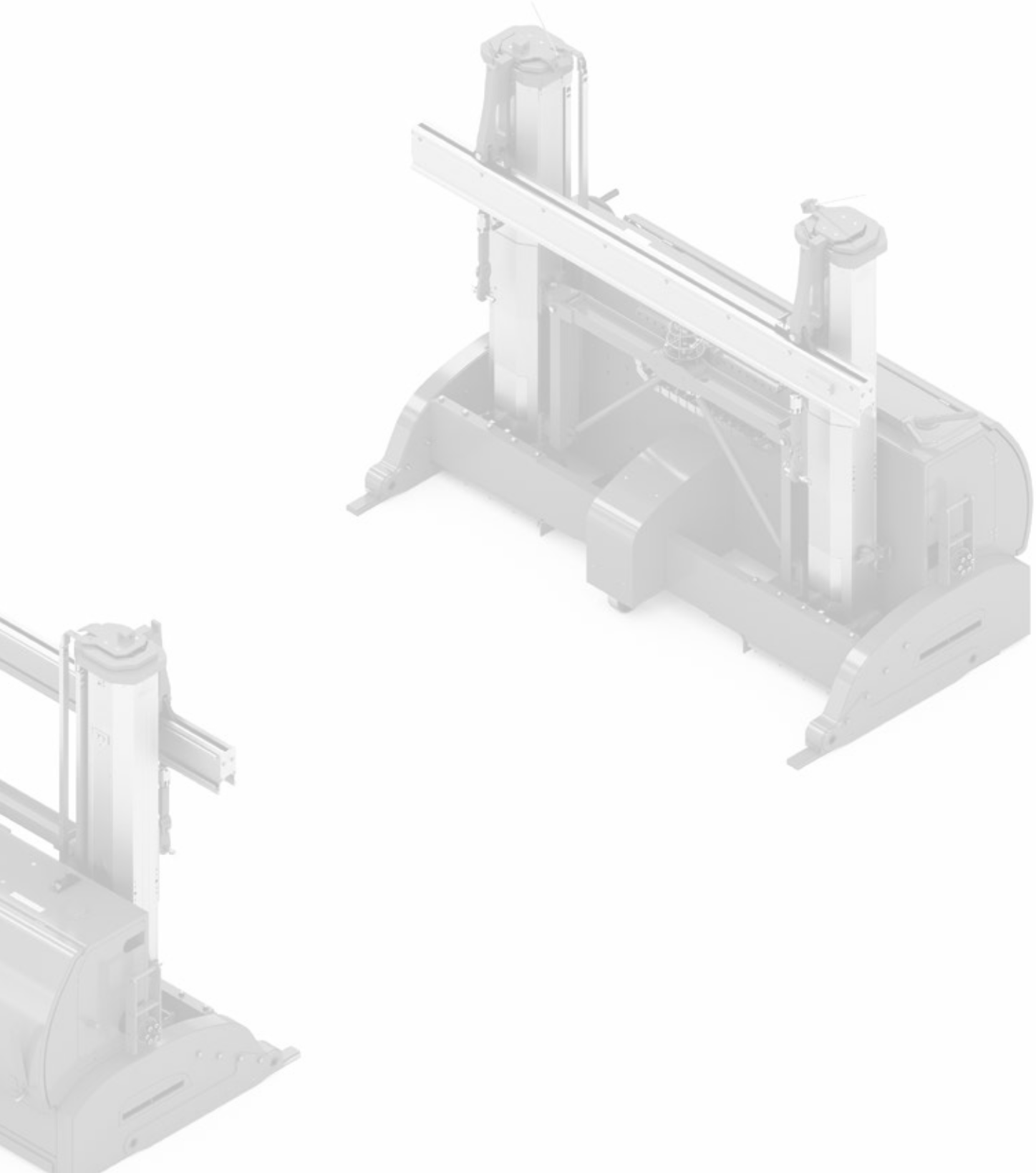

14

POWER PLANT
ATA CHAPTER 71

14.1 ENGINE CHANGE SYSTEM

DESCRIPTION

The COBRA Engine Change System has been designed to ensure a fast engine change and to minimize operational failure and technical risks.

This offers tremendous benefits by reducing costs through minimal aircraft downtimes.

STANDARD CHARACTERISTICS

- Universal, innovative engine change system
- Applicable to aircraft with wing-mounted engines
- Interchangeable adapters for flexible and universal handling of engine dollies, cradles and shipping stands
- Accessories available for multi-purpose applications
- Suitable for a wide range of aircraft

PRODUCT FEATURES

- Consists of primary and secondary unit
- Semi-automatic lifting of engine, dolly and cradle or shipping stand
- 4 pillars: each pillar can be controlled independently
- Movement possible in 3 axes

AVAILABLE ACCESSORIES

- Transportation trailer with or without diesel power unit
- Spare part kit
- Load cell calibration kit
- Diesel power unit
- Lift adapters for a wide range of aircraft, e.g. TPAA1A2A0A0B0 for A350 XWB with RRT089139 stand

BENEFITS

- OEM approved
- Up to 70 % time saving for engine changes (compared to bootstrap)
- Short amortization period on investment cost
- Protects the aircraft, engine and operator with various safety features
- Easy operation
- On-site service

TECHNICAL SPECIFICATION

ENGINE CHANGE SYSTEM

Model-No.		TP91G1A	TP91G1F
Performance	Nominal capacity	16.3 t (36,000 lbs)	16.3 t (36,000 lbs)
	Max. lift stroke	2,800 mm 110.2 ich	1,700 mm 67 inch
	Lifting speed	5 mm/sec or 10 mm/sec [fast mode] 0.2 inch/sec or 0.4 inch/sec [fast mode]	5 mm/sec or 10 mm/sec [fast mode] 0.2 inch/sec or 0.4 inch/sec [fast mode]
	Power supply	3/PE AC 50 Hz 380-420 V or 3/PE AC 60 Hz 440-480 V	3/PE AC 50 Hz 380-420 V or 3/PE AC 60 Hz 440-480 V
Movability	Max. longitudinal movement	± 120 mm ± 4.7 inch	± 120 mm ± 4.7 inch
	Max. transversal movement	± 150 mm ± 5.9 inch	± 150 mm ± 5.9 inch
	Max. inclination	10°	10°
Weight	Weight primary unit	1,200 kg (2,645 lbs)	1,200 kg (2,645 lbs)
	Weight secondary	1,100 kg (2,425 lbs)	1,000 kg (2,200 lbs)

Manufacturer	Aircraft Applications	Engine Applications
Airbus	A220	PW1500G
	A320	CFM56-5 LEAP-1A PW1100G V2500
	A330	CF6-80 PW4000 Trent 700 Trent 7000
	A340	CFM56-5 Trent 500
	A350	**Trent XWB**
	A380	GP7200 Trent 900

Manufacturer	Aircraft Applications	Engine Applications
Boeing	B737	CFM56 -3/-7 LEAP-1B
	B747	GEnX CF6-80
	B757	PW20000 RB2111
	B767	CF6-80 PW4000
	B777	GE90 PW4000 Trent 800
	B787	GEnX Trent 1000

14.2 ENGINE PEDESTAL SET

DESCRIPTION

HYDRO Engine Pedestal Sets (EPS) are multi-purpose systems which can be used for various engine types from different engine manufacturers.

For each new engine combination only a new adapter set is required while the pedestals are universal and used for any combination.

The basic set consists of 2 pedestals used at the front and 2 pedestals used at the rear of the engine. Due to the universal application of the basic set less storage space is required.

PRODUCT FEATURES

- Consists of 2 pedestals used at the front and 2 pedestals used at the rear engine

AVAILABLE ACCESSORIES

- Spring loaded ball castors for easy positioning of pedestals

OPTIONS

Engine Adapter Kit

Engine adapter kits are available separately for each engine type and are attached to the basic set. Each engine adapter kit includes 2 rear adaptors and 2 front adaptors. E.g. 47001-026-000 for A350 — Trent XWB (Please note that additionally 1 x RRT059450-1 is required).

BENEFITS

- Universal application
- Cost savings
- Space savings
- On-site service

TECHNICAL SPECIFICATION

ENGINE PEDESTAL SET

Model-No.	EPS002-002
Nominal capacity	9 t
Weight basic set	1,270 kg (2,800 lbs)

Manufacturer	Aircraft Applications	Engine Applications
Airbus	A300	PW40xx
	A319/A320	CFM56-5A
	A319/A320/A321	CFM56-5B V2500-A1/-A5
	A320 neo	Leap-1A PW1100G
	A330-200/ -300	CF6-80E1 PW4168 / PW4170 Trent 700
	A340-200/ -300	CFM56-5C
	A340-500/ -600	Trent 500
	A350-900/ -1000	**Trent XWB (additionally 1x RRT059450-1 is required)**
	A380	Trent 900

Manufacturer	Aircraft Applications	Engine Applications
Boeing	B737 CG	CFm56-3
	B737 NG	CFM56-7B
	B737 MAX	Leap-1B
	B747	CF6-80C2
	B757-200/ -300	PW20xx RB211-535E4
	B767-200/ -300	PW40xx
	B777-200/ -300	Trent 800
	B787-8/ -9/ -10	Trent 1000

14.3 XWB — SES CORE STAND

DESCRIPTION

The Split Engine Stand (SES) is essential in supporting the split and reconfiguration of the Rolls-Royce Trent XWB engine. HYDRO is the original designer and licensed manufacturer of this engine transportation stand.

The Split Engine Stand consists of

- Fan Case Stand (RRT057892)
- Core Stand (RRT057891)
- Storage container (P/N RRT070226)

PRODUCT FEATURES

- Retractable, swivel castors, storable during transportation
- Shock attenuation system to prevent engine damage during road transportation
- Blocking mechanism of shock attenuation system: for use during airfreight transportation and split process
- Adjustable frames for proper alignment during split / reassembly process and handling of the engine / core including:
  1.) Longitudinal movement in X — axis (engine / core) of the intermediate frame, actuated by hand wheel / lever
  2.) Vertical movement in Z-axis (engine / core) of upper frame, actuated by power drill or hand wheel / lever
- Guiding and fixing features for proper orientation of core stand and fan case stand
- Towing bar for local site movements, attachable on the front and the rear side
- Provisions for fork lifting
- Hoisting points
- Lashing points

AVAILABLE ACCESSORIES

Storage kit

BENEFITS

- Low risk option
- HYDRO is a 'Rolls-Royce Preferred Supplier of Trent XWB Transportation Equipment'
- To date we have supported many Trent XWB Entry Into Services with the SES product range, and have provided many SES directly to Rolls-Royce plc
- The HYDRO facility in the US is designed and productionized to support the high volume manufacture of the Split Engine Stand
- Our experience allows HYDRO to offer an extremely high quality SES, at a competitive price
- COBRA compatibility
- Air, sea and road transportability
- On-site service

TECHNICAL SPECIFICATION

XWB — SES CORE STAND

Model-No.	RRT057891
Application	A350–900 XWB

14.4 XWB — BASIC STAND

DESCRIPTION

The Basic Engine Stand is a modular system to allow storage and local-site movement of a Trent XWB engine. It is available in two different configurations. Various additional tools are required for usage.

Bootstrapping & Local Transportation

- 1x RRT089139 Basic Stand XWB: Mandatory
- 1x RRT089143 Castor Kit: Mandatory
- 1x RRT061134-3 Bootstrap Adaptor: Mandatory
- 1x RRT089162 Support frame: Mandatory
- 1x RRT089158 Towing Kit: Recommended
- 1x RRT089154 Lift Adaptors: Recommended
- 1x RRT089147 MVP Bag: Optional
- 1x RRT089163 MasterMover Interface: RR use only

PRODUCT FEATURES

- Essential for the Trent XWB Engine transportation
- Used for Bootstrapping of XWB engine
- Stands (either empty or with engine installed) are transportable by fork-lift truck
- A lot of different options, features are available and easily retrofittable

BENEFITS

- To allow storage and local-site movement of a Trent XWB engine
- Sea and road transportability
- Easy handling

TECHNICAL SPECIFICATION

XWB — BASIC STAND

Model-No.	RRT089139
Application	A350 – 900 XWB

14.5 XWB — WES ENGINE STAND

DESCRIPTION

The XWB WES (Whole Engine Stand) Engine Stand has been designed for storage, road, sea and air transport. Furthermore it will withstand local site movements.

PRODUCT FEATURES

- Road transportation of a Trent XWB engine
- Air transport of a Trent XWB engine in large freighters e.g. Antonov (B747F/ B777F is not possible, Split-Engine-Stand SES is required)
- Air transport of empty stand possible in B747F/ B777F
- Storage and local on-site movement of a Trent XWB engine
- Integrated hydraulic rolling mechanism for lowering of the engine
- Shock absorbers to protect the engine
- Shock-absorbing and retractable castors
- Hydraulic leveling system
- Tow-bar
- Integrated forklift tubes plus forklift limiter to avoid engine damage during forklifting
- Integrated box for storage of loose parts etc.
- Rigging points for securing of stand
- Lifting of stand with / without engine possible with optional lifting adaptor and sling

BENEFITS

- Air, sea and road transportability
- Shock absorbed
- Easy handling
- On-site service

TECHNICAL SPECIFICATION

XWB — WES ENGINE STAND

Model-No.	RRT089140
Application	A350-900 Trent XWB-84/ -97

14.6 IglooMX ENGINE CHANGE SHELTER

HYDRO PARTNER PRODUCT
JB ROCHE

DESCRIPTION

AOG incidents can lead to costly delays and scheduling difficulties for operators. The patent protected IglooMX Inflatable Engine Change Shelter system provides the ideal solution for such events. This "hangar-in-a-bag" system reduces downtime to a minimum and enables the AOG team to get the aircraft back in the air in the least possible time, thereby saving on costly hangar rentals and lost man hours. The IglooMX Shelter system is small enough to ship as part of the fly-away kit. It may be set up on either engine to encapsulate both engine and pylon. By following the simple installation instructions provided, this kit can be installed in a matter of minutes by a crew of 3-4 people. Once in place, the shelter system will boost your maintenance team's productivity by providing a warm and safe environment in which to work.

These shelters feature specially designed fabrics that are both lightweight and tough, providing excellent abrasion and tear resistance. The unique materials are also fire retardant and resistant to hydraulic fluid and fuels, ensuring that they remain functional for many years. The IglooMX is supplied in a storage bag on wheels, making it easy to move around on the apron. In the unlikely event that the shelter becomes damaged while in use, an on-site repair kit is supplied as part of the package. The IglooMX kit can be deflated and stored away in around 20 minutes.

PRODUCT FEATURES

- Installation crew: 4-6 persons
- Inflation time: 5 minutes
- Folding and re-packing time: 20 minutes
- Strong but lightweight for easy handling
- Fire retardant and resistant to fuels, oils and hydraulic fluids
- Unique patented design
- Withstand wind speeds of up to 25 knots
- 20 year proven track record with leading airlines, airframers and MRO's

AVAILABLE ACCESSORIES

- Ramp heater
- Air-conditioning
- Lighting set on tripods
- Reusable shipping crate
- Water filled ballast bag kit

BENEFITS

- Can be branded with airline logo
- No previous training required
- Provides privacy from passengers during maintenance
- Models available for use with COBRA Engine Change System
- Airbus approved
- Can be powered using a kVA Generator
- Suitable for use on wide range of widebody aircraft

TECHNICAL SPECIFICATION

ENGINE CHANGE SHELTER

Model-No.	890177
Dimensions (packed)	1,800 mm x 1,200 mm x 1,100 mm 70.9 inch x 47.3 inch x 43.3 inch
Dimensions (setup)	11,300 mm x 12,500 mm x 6,600 mm 445 inch x 492.1 inch x 259.9 inch
Packaged weight	295 kg 650.4 lbs
Ambient temperature	-30 °C to +70 °C -22 °F to +158 °F
Inflation device	2 H.P. Electric Blower
Power supply	110 V 60 Hz or 220 V 50 Hz models available
Applications	**A350**, B787, B777

COBRA ENGINE CHANGE SHELTER*

Model-No.	890195
Dimensions (packed)	2,000 mm x 1,400 mm x 1,100 mm 78.7 inch x 55.1 inch x 43.3 inch
Dimensions (setup)	12,600 mm x 12,300 mm x 9,000 mm 496 inch x 484.3 inch x 354.3 inch
Packaged weight	600 kg 1322.8 lbs
Applications	**A350**

*temporarily dimensions

HYDRO PARTNER PRODUCT

14.7 ENGINE ACCESS STAND

DESCRIPTION

This stand was specifically designed for the A350 and the B777. We use anti-fatigue ladder rungs rather than narrow ladder rungs to ensure comfort when using the stands to change LRU'S, adjust components or connect/disconnect engines and nacelles. Design improvements include a lighter stand utilizing a smaller footprint and greater geometry for optimum usage.

The stand facilitates safe access to nose cowls, fan cowls and pylon disconnect zones on PW, GE and RR engines, providing a safe working solution to many of the traditionally difficult under-cowling maintenance locations. The unit is also designed to safely access the same points outside of cowling, specifically forward and aft pylon service points. The hard to reach refuel panels and under-wing areas are also accessible using this product.

PRODUCT FEATURES

- Anti-fatigue ladder rungs rather than narrow ladder rungs. This ensures comfort when using the stands e.g. to change LRU's
- Fall restraint anchor points
- The height and angle adjustments on this stand allow for diverse angle and height changes frequently required when servicing aircraft
- Extensive aluminum construction for easy movement and a corrosion-resistant powder coat finish for longevity
- A350 access to engines (under "C" duct), pylon and bulk cargo
- 20 year proven track record with leading airlines, airframers and MRO's
- Designed and tested in accordance with ANSI-ASC A14.7 and BS EN 131.7
- Padding material equipped
- Controls: Hydraulic foot pump
- Ergonomic design
- High-grade materials
- One person movement
- Powder coated finish

AVAILABLE ACCESSORIES

- Air powered pump
- Utilities package
- Extension
- Additional upper platform
- Fold away tow-bars
- Lift truck fork pockets
- Levelling jacks

BENEFITS

- Flexible use on a wide range of widebody aircraft
- Safety and Reliability
- Unrivalled quality and durability
- Small Footprint and Greater Geometry
- Rigorous inspection and testing
- Designed according to ANSI-ASC A14.7 and BS EN 131.7

TECHNICAL SPECIFICATION

ENGINE ACCESS STAND

Model-No.	DF071554-07-10
Towing speed	10 KPH/ 6 MPH
Material type	Ladder: Aluminum Frame: Aluminum
Certifications	ANSI-ASC A14.7, BS EN 131.7
Shipping info (DIMS)	2,235 mm x 1,321 mm x 2,425 mm x 499 kg 88 inch x 52 inch x 128 inch x 1,100 lbs
Height	Low: 3,871 mm, High: 5,258 mm Low: 152.4 inch, High: 207 inch
Foot print	2,235 mm x 3,251 mm 88 inch x 128 inch

14.8 ENGINE TOOLING

DESCRIPTION

Since 2007 HYDRO is a preferred supplier to Rolls-Royce for products and services relating to Engine Tooling and Ground Support Equipment. We provide our products and services to Rolls-Royce and its after-market customers.

OUR COPE OF SUPPLY

Products

- Build and strip tooling
- Line maintenance tooling
- Component repair tooling
- Electrical test equipment
- Moisture and vapor protection equipment
- Engine blanks
- Special to product test equipment (SPTE)
- Engine transportation stands
- Make to Print
- Design and make
- Repair and refurbishment
- Calibration
- Tool management
- Packing and shipping
- Customer Technical Support

BENEFITS

- Extensive experience in tooling design and manufacturing
- Outstanding quality and cost reduction by using HYDRO and its global supply chain
- Experienced project management, design and project engineering teams
- Well-proven tooling design process
- Extensive base of external suppliers for engineering design services Specialized project engineers for balancing tooling, multi-product-tooling and value engineering
- Comprehensive knowledge in aero engine design and build and strip of engines
- We turn your tooling activities around into a profitmaking business!

TOOLING AVAILABLE FOR THE FOLLOWING ENGINE PROGRAM

Engine	Aircraft
Trent XWB	A350

HYDRO supports engine tools also for other engine programs, including Trent 1000, Trent 900, Trent 800, Trent 700, and many more.

15

ENGINE EXHAUST & THRUST REVERSER

ATA CHAPTER 78

15 HAND PUMP

DESCRIPTION

Universal thrust reverser hand pump including standard coupling for all Airbus and Boeing aircraft.

TECHNICAL SPECIFICATION

Model-No.	AIT780003
Aircraft Application	Universal
Application	all

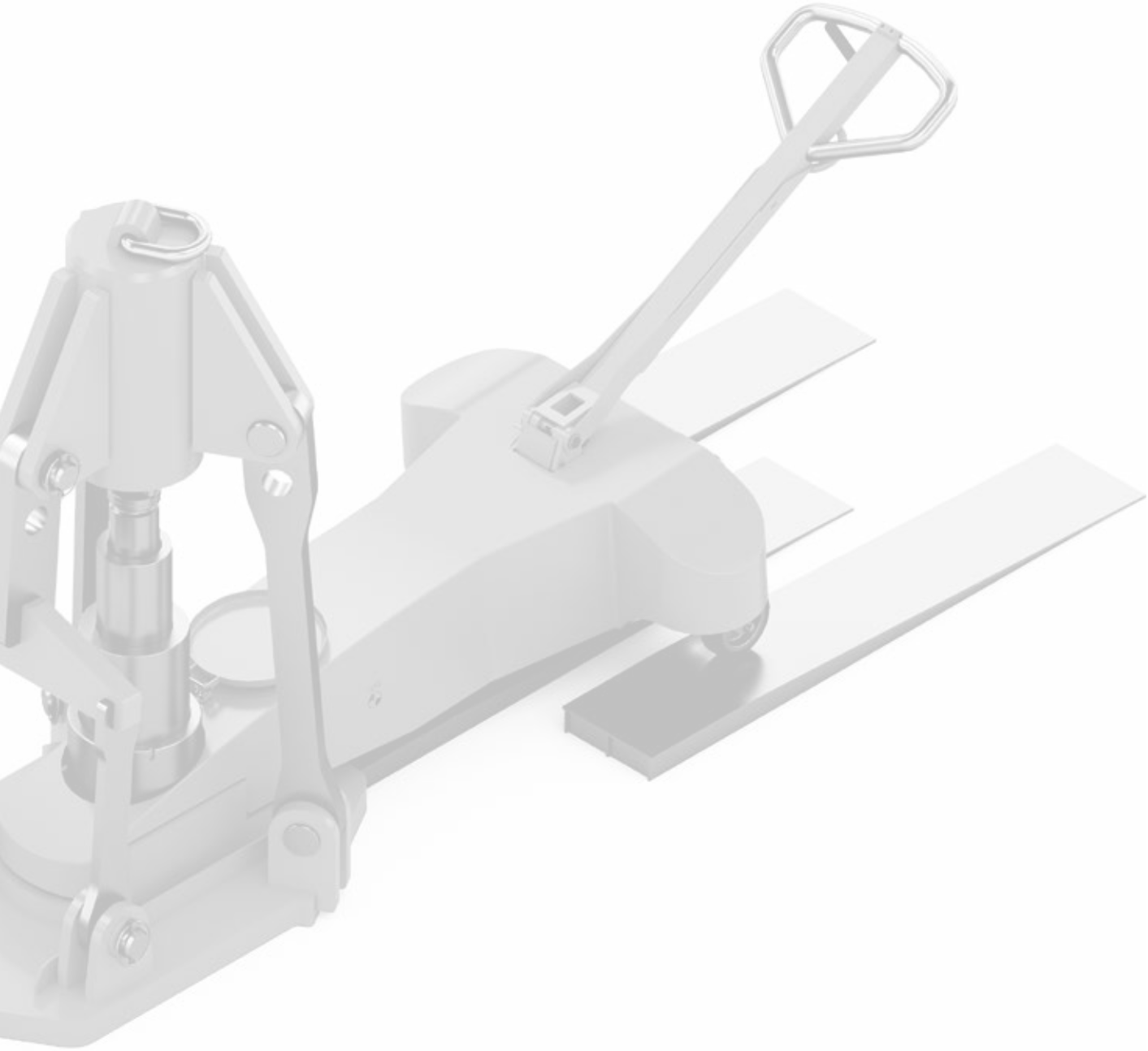

16
OTHERS

16.1 PROOF LOAD TEST FIXTURE

DESCRIPTION

The HYDRO proof load test fixture has been designed for testing of lifting devices.

The HYDRO proof load test fixtures are used for

- Checking: the hydraulic lift cylinder and hydraulic circuit of tripod- and axle-jacks for leakage
- Controlling: the preciseness of the load indicator of tripod- and axle-jacks Testing: the adjustment of pressure relief valves of the hydraulic circuit of tripod- and axle-jacks

Standard characteristics of PV165 and PV250

- Load cell
- Adapter pieces (male ø 19 mm and ø 32 mm, female ø 44.5 mm)
- Laptop with testing software "HyCat" and case
- Color printer for test certificates with case
- Measuring cable
- Storage box
- Power supply AC 240 V/ 0.04 kVA/ 50 Hz

Standard characteristics of PV050

- Hydraulic load cell (PV165 load cell also usable)
- Adapter pieces (male ø 19 mm and ø 32 mm)
- Storage box

AVAILABLE OPTIONS

- Individual braces for each tripod-jack
- Measuring amplifier and LED-display (instead of laptop with testing software)
- Roll-paper printer for documentation of the measuring points

TECHNICAL SPECIFICATION

PROOF LOAD TEST FIXTURE

Model-No.	PV050	PV165	PV250
Max. test force	50 t 55.0 tons	165 t 181.5 tons	250 t 275.0 tons
Application	For all HYDRO tripod-jacks and axle-jacks with a test capacity up to 50t	For all HYDRO tripod-jacks and axle-jacks with a test capaity up to 165 t	For all HYDRO tripod-jacks and axle-jacks with a test capaity up to 250 t

16.2 AIRBUS TOOLING

DESCRIPTION

HYDRO has a long standing business relationship with Airbus. All sales and material provisioning is done by Airbus/Satair exclusively. Contractually, HYDRO is thus allowed to sell Airbus proprietary tooling directly to the aftersales market and third parties.

Airbus propriety tooling is to be solely procured through Airbus/Satair. HYDRO has a specialized tooling sales team located in Seattle, USA.

BENEFITS

- Short lead times
- Competitive pricing
- High quality products
- Global customer sales and service support

Airbus/Satair tools procurement organization

http://www.satair.com/products/tools-and-gse

WORLDWIDE FOOTPRINT

SALES REPRESENTATIVE | SERVICE CENTER | MAIN OFFICE

HYDRO SYSTEMS KG
Headquarters

Ahfeldstrasse 10
77781 Biberach / Baden
Germany

Phone: +49 (0) 7835 787 - 0
Fax: +49 (0) 7835 787 - 8888
info@hydro.aero

www.hydro.aero

HYDRO
Precision in Aircraft Support

In safe hands.

HY_A320EQUIPMENT_200805.PDF