IN SAFE HANDS

1_INDEX

A

ACU — Aircraft Control Unit
A unit with facilities and personnel, including controllers, for conducting aircraft control and which exercises tactical control of aircraft or a unit(s).

APU — Auxilliary Power Unit
The APU is a small jet engine that is used to start the larger jet engines. In airliners it's usually at the very rear of the aircraft, below the tail.

AVAD — Automatic Vertical Adjustment Device
The Automatic Vertical Adjustment Device allows automatic fast and precise vertical alignment of tripod-jack at any time during the tripod positioning process.

C

CSD — Constant Speed Drive
A constant speed drive is a mechanical gearbox that takes an input shaft rotating at a wide range of speeds, delivering this power to an output shaft that rotates at a constant speed, despite the varying input. It is used to drive mechanisms, typically electrical generators, that require a constant input speed.

E

EJAL — Electronic Jacking And Levelling
The EJAL system is a fully automated system for syn-chronized aircraft lifting and lowering with a tripod-jack set.

EPS — Engine Pedestal Sets
Engine Pedestal Sets (EPS) are multi-purpose systems which can be used for various engine types from different engine manufacturers for engine storage and maintenance tasks.

F

Fly-away version
Shorter and lighter version of a product, to be stored in an aircraft. This version is not intended to be used in everyday application.

H

HGPU — Hydraulic Ground Power Unit
The Hydraulic Ground Power Unit is used for maintenance and testing of mainline aircraft hydraulic systems.

I

IDG — Integrated Drive Generator
The IDG is the world standard for constant frequency power in aircrafts. It is part of the engine.

IglooMX
Patent protected aircraft maintenance shelter as "hangar-in-a-back".

L

LTS — Laser Target System
The mobile laser target system allows faster positioning of tripod-jacks for aircraft jacking. It can be universally used on all tall HYDRO tripod-jacks.

M

MLG — Main Landing Gear
The main landing gear is the undercarriage of an aircraft and will be used for either takeoff or landing. The main landing gear is located under the wing or next to the body structure.

N

NB — Narrow-Body
A narrow-body aircraft or single-aisle aircraft is an airliner arranged along a single aisle permitting up to 6-abreast seating in a cabin below 4 metres (13 ft) of width.

NLG — Nose Landing Gear
The nose landing gear is the undercarriage of an aircraft and will be used for either taxiing, towing, takeoff or landing. The nose landing gear is located under the nose of an aircraft.

R

RA-Design - Alligator axle-jack design. The RA axle-jack has been designed for removing and installation of wheels and brakes in normal conditions and rough floor movement.

RC-Design - Compact axle-jack design. This fly-awy axle-jack has been specially designed for removal and installation of aircraft wheels in normal conditions.

RH-Design - Handcarry axle-jack design. The RH fly-awy axle-jack has been specially designed for removal and installation of aircraft wheels in normal conditions.

RL-Design - Cantilever axle-jack design. The RL axle-jack has been designed for removing and installation of wheels and brakes in recovery conditions.

RT-Design - T-shape axle-jack design. The RT axle-jack has been designed for removing and installation of wheels and brakes in normal conditions.

S

Standard version
Special designed tool for one aircraft application.

U

Universal version
Special designed tool for a various range of aircraft application.

W

WB — Wide-Body
A wide-body aircraft is a larger airliner usually configured with multiple aisles and a fuselage diameter of more than 5 metres (16 ft) allowing at least seven-abreast seating and often more travel classes.

2_EQUIPMENT LIST

Equipment	Version	Location / Designation	Model-No.
ATA Chapter 06 — Dimensions & Areas			
STANDARD PORTFOLIO			
Aircraft Maintenance Access Stand	Standard		DF071554-06
Multi-Purpose Platform Stand	Standard		DF071556-03XP
ATA Chapter 07 — Lifting & Shoring			
STANDARD PORTFOLIO			
Tripod-Jacks	Standard FortEvo Set	Wing	FEN351
		Nose	FEN10
		Tail	FEN06
	Universal FortEvo Set	Wing	FENT354
		Nose	FENT101
		Tail	FEN15
	Shoring Stanchion		MS30
			MS43
Axle-Jacks	Standard	MLG & NLG	RA4550 RA6050 RA9050 RA10050
		MLG & NLG	RT4550 RT6050
	Fly-away	MLG & NLG	RC4509 RC6010
		NLG	RH1606 RH1029
	Recovery	MLG & NLG	RL6011
	Steering Test	Universal	SG170
	Recovery Beam	NLG	RAJB1601
Axle-Jack Hose pressure kit	Hose pressure kit		PO54665

Equipment	Version	Location / Designation	Model-No.
ATA Chapter 09 — Towing & Taxing			
STANDARD PORTFOLIO			
Tow-bars	Standard	NLG	TOWA320S
	Universal	NLG	TOWUNIV3
		NLG	TOWUNIV9
Recovery Kit		MLG	SG237-003
ATA Chapter 12 — Servicing			
STANDARD PORTFOLIO			
Service Carts	Standard	Nitrogen Service Cart	NBNT-2
			NBNT-4
		Oxygen Service Cart	NBOT-2
			NBOT-4
		Service Support Trailer	NBWBCT
Fluid Dispenser	Standard	Fluid Dispenser	BOB
Aircraft tyre inflation	Standard	Aircraft tyre inflation	MK7ATIS
Aircraft tyre pressure gauges	Standard	Aircraft tyre pressure gauges	NTG3004
Oil filling unit			AIT120001
ATA Chapter 24 — Electrical Power			
STANDARD PORTFOLIO			
Loop Resistance Tester Airliner Set	Standard		IM2FSAL1 / IM2FSAL2
ATA Chapter 25 — Equipment / Furnishing			
STANDARD PORTFOLIO			
Cabin Interior Access Stand	Standard		DF071553-01

Equipment	Version	Location / Designation	Model-No.
ATA Chapter 29 — Hydraulic Power			
STANDARD PORTFOLIO			
Hydraulic Power	Standard		HGPU50-30
Water Separator System	Standard		WSS4
Test Equipment for RAM-Air Turbine	Standard		PGRAT1 RATMK RSIK1
Sampling Valve	Standard		SVC1
ATA Chapter 32 — Landing Gear			
STANDARD PORTFOLIO			
Wheel/Brake Change Dolly	Universal	NLG / MLG	WTA500AP
	Universal	NLG / MLG	MH12-005
	Universal	NLG / MLG	MH13-003
	Universal	NLG / MLG	MH21
Landing Gear Dolly	Standard	NLG & MLG	LGD11-001
MLG R/I Trolley	Standard	Universal Base Unit	MLGTMULTI-1
	Standard	MLG Frame	MLGFA320
	Standard	NLG Frame	NLGFA320
Strut Compression	Standard	MLG	SG196
Landing Gear Access Stand	Standard	MLG	DF071592-04
Aircraft Wheel Chocks			NBWC-6 NBWC-9
Aircraft Strut and Accumulator Service Tool	Standard		SIC8000-001 SIC3500-001
Aircraft Wheel and Tyre Handling	Standard		NBWS

Equipment	Version	Location / Designation	Model-No.
ATA Chapter 38 — Waste Line Cleaning			
STANDARD PORTFOLIO			
Waste Line Cleaning System	Standard		WLC1-A
Mobile Lavatory Vacuum Blockage Remover	Standard		VTBR
Waste Water Trailer	Standard		WWT1500
ATA Chapter 53 — Fuselage			
STANDARD PORTFOLIO			
IglooMX Fuselage Shelter	Standard	Fuselage	890136
IglooMX Nose Shelter	Standard	Nose	890133
MEWP Shelter	Standard		892019
Inflatable Maintenance Hangar	Standard		89XXA
Hangar Door Infill	Standard		892XX
Iris Door Infill	Standard		892XY
Wifi Antenna Shelter	Standard		890184
ATA Chapter 54 — Nacelles / Pylon			
STANDARD PORTFOLIO			
Nose Cowl Dolly Installation Device	Standard		DF071560-01

Equipment	Version	Location / Designation	Model-No.
ATA Chapter 71 — Power Plant			
STANDARD PORTFOLIO			
Engine Change System "COBRA"	All Engines	Engine	TP91G
Hold Open Tool	CFM56-54 / -5B	Engine	AIT710001
	V2500-A1 / -A5	Engine	AIT710002
Engine Pedestal Set	Universal NB Pedestal Set w / o adapters	Engine	EPS001-003
	CFM56-5A / -5B adapter	Engine	47001-001-000
	V2500-A1 / -A5 adapter	Engine	47001-003-000
Engine Dolly	CFM56-5A / -5B and V2500-A1 / -A5	Engine	ED005-009
Engine Cradle	CFM56-5A / -5B	Engine	EC004-005
	V2500-A1 / -A5	Engine	EC001-002
Engine Sling	Universal Hosting Sling	Engine	HG20
			HG20-001
			HG49
IglooMX Engine Change Shelter			890145
			890167
			890195
Engine Access Stand			DF071554-07-08
Hold-open Device	CFM56-5A/B	Engine	AIT710001
	V2500	Engine	AIT710002
	CFM56-5A/B	Engine	AIT710007
	V2500	Engine	AIT710008

Equipment	Version	Location / Designation	Model-No.
Others			
STANDARD PORTFOLIO			
Proof Load Fixture	All HYDRO Equipment		PV050
			PV165
			PV250

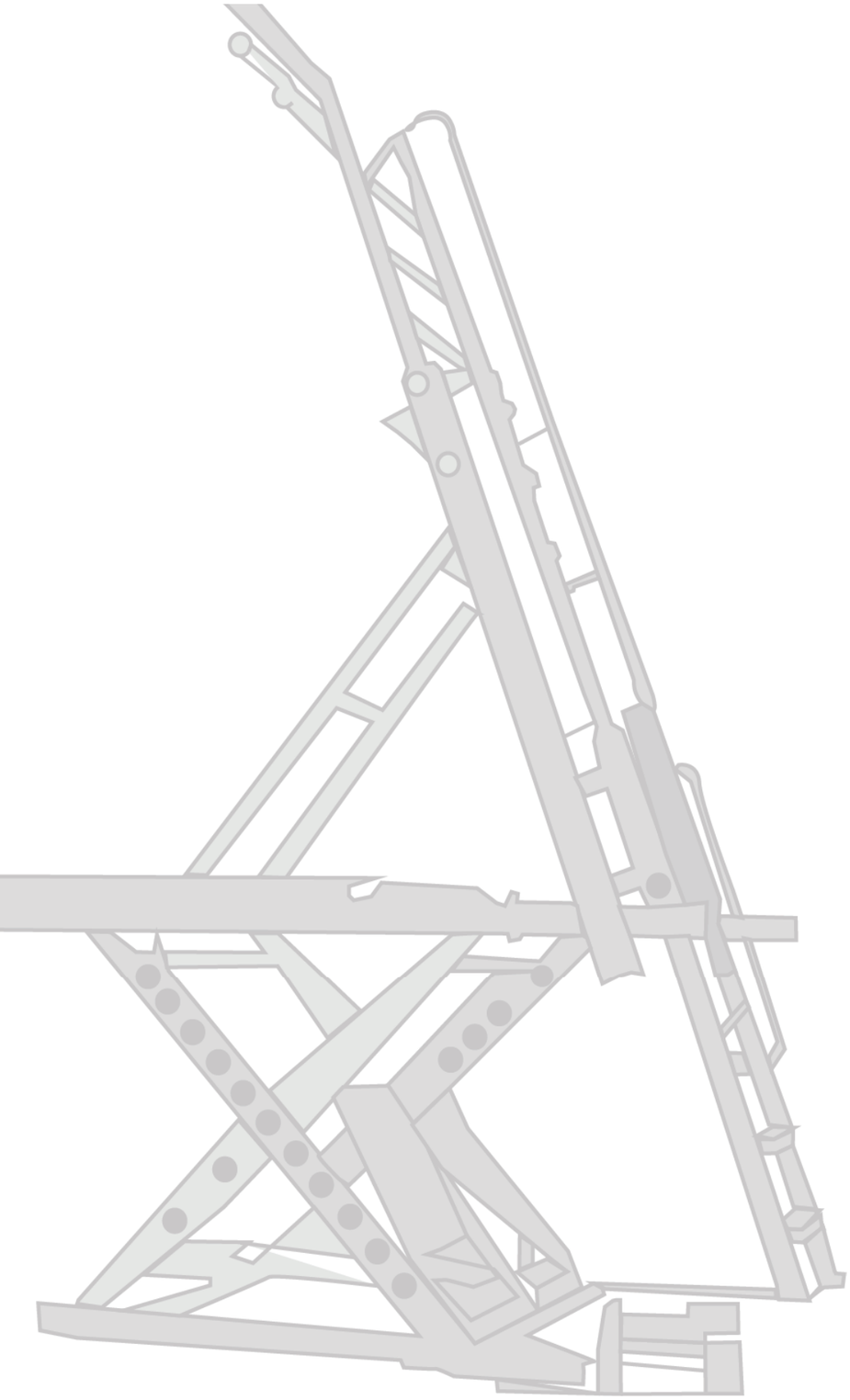

3

DIMENSIONS & AREAS
ATA CHAPTER 06

3.1 AIRCRAFT MAINTENANCE ACCESS STAND

HYDRO PARTNER PRODUCT LIFTSAFE FALL PROTECTION INC.

DESCRIPTION

This stand is designed with an adjustable scissor lift base to give it the height required to access variable areas on the aircraft. It is designed for multiple aircraft use. For wide-body aircraft the stand facilitates safe access to nose cowls, fan cowls and pylon disconnect zones on PW, GE and RR engines, providing a safe working solution to many of the traditionally difficult under-cowling maintenance locations.

The unit is also designed to safely access the same points outside of cowling, specifically forward and aft pylon service points, as well as hard to reach refuel panels and underwing areas.

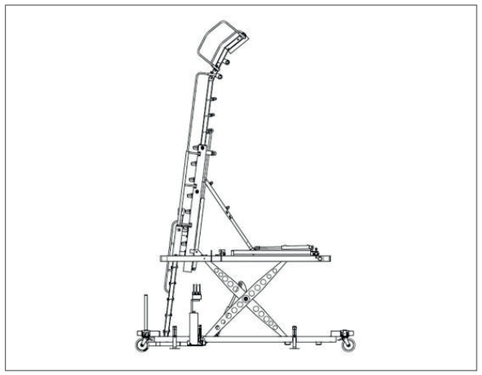

PRODUCT FEATURES

- Anti-fatigue ladder rungs rather than narrow ladder rungs (this ensures comfort when using the stands to change LRU'S, adjust components, or connect/ disconnect engines and nacelles)
- Fall-restraint anchor points
- The hydraulic pitch and height adjustment allows for the diverse angles and height variables
- Extensive aluminum construction for easy movement and corrosion-resistant powder coat finish for longevity
- For increased safety and ease of mobility, the stand comes equipped with four corner-levelling jacks, fold-away tow-bars and lift truck fork pockets
- Designed and tested in accordance with ANSI-ASC A14.7 and BS EN 131.7 adjustable scissor lift base
- Padding material equipped
- Controls: Hydraulic
- High-grade materials
- 2 person movement
- Powder coated finish
- Foot pump

APPLICATION POSSIBILITIES ON AIRBUS A320 (A319 / A321 CEO AND NEO)

- Outboard engines
- Wing refuel panel
- APU servicing
- Wing tip nav lights
- Flap canoes / fairings
- Wing landing lights
- Passenger windows
- Wing access
- Main entry door sills
- Windshield inspections
- AOA / true airspeed probes inspections / replacements

Attention: Usage examples only, validation of usage is under responsible of the operator. Further applications are available.

OPTIONS

- Air-powered pump
- Utilities package
- Extension
- Additional upper platform

BENEFITS

- Flexible use on a wide range of wide-body and narrow-body aircraft
- Safety and reliability
- Unrivalled quality and durability
- Ergonomic design

TECHNICAL SPECIFICATION

AIRCRAFT MAINTENANCE ACCESS STAND

Model-No.	DF071554-06
Towing speed	10 kph / 6 mph
Material type	Ladder: Aluminum Frame: Steel
Certifications	ANSI-ASC A14.7, BS EN 131.7 & CE
Dimensions (shipping)	2,278 mm x 1,638 mm x 4,145 mm 89.69 inch x 64.5 inch x 163.2 inch
Weight	1,089 kg 2,400 lbs
Height	Low: 3,213 mm / 126.5 inch High: 6,077 mm / 239.25 inch
Foot print	2,278 mm x 4,145 mm 89.7 inch x 163.2 inch
Airbus applications	A300 / A310 **A319neo / ceo, A320neo / ceo, A321neo / ceo**, A330neo / ceo, A340, A350, A380
Boeing applications	B737 (NG and MAX) B474, B757, B767, B777, B777X, B787
Other applications	Embraer ERJ

3.2 MULTI-PURPOSE PLATFORM STAND

HYDRO PARTNER PRODUCT LIFTSAFE FALL PROTECTION INC.

DESCRIPTION

The Aviation Platform Stand has been designed for maintenance access points for a multitude of aircraft, as well as the possibility of a safe platform for two person use. The lowered position is designed to clear wheel well entry points and has been tested and is operational on both Airbus and Boeing wide-body aircraft.

The unit is in service at a multitude of operators, MRO's and manufacturers.

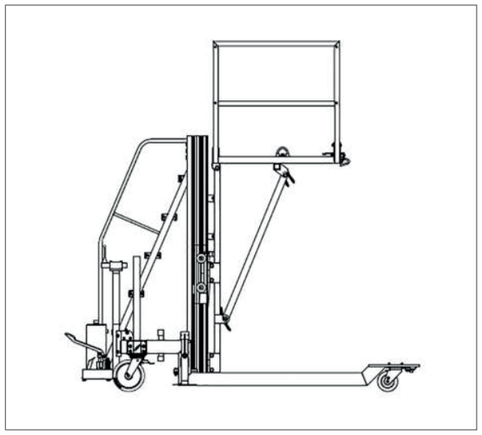

PRODUCT FEATURES

- Telescopic side rails ensure safety compliant access to the forward and aft lower cargo holds
- Anti-fatigue ladder rungs
- Anti-fatigue ladder steps ensuring the safety of your maintenance staff
- Padding material equipped
- Fall restraint anchor points
- Hydraulically actuated via an ergonomically positioned foot pump
- Collapsible guardrails
- High-grade materials
- One person movement and testing
- Powder coated finish ensures corrosion resistance maintaining the longevity of the stand
- Controls: hydraulic foot pump
- Rigorous inspection and testing
- Safe platform for two person use

APPLICATION POSSIBILITIES ON AIRBUS A320 (A319 / A321 CEO AND NEO)

- Forward and aft lower cargo (-03/ -03XP)
- Bulk cargo (-03)
- Aft pressure bulkhead access panel (-03)
- Pitot probe tube inspections/ replacements (-03/ -03XP)
- Static port inspections/ replacements (-03/ -03XP)
- Trailing edge actuator inspections/ replacements (-03/ -03XP)

Attention: Usage examples only, validation of usage is under responsible of the operator. Further applications are available.

OPTIONS

- Air-powered pump
- Utilities package
- Tow-bar
- Telescopic rails

BENEFITS

- Flexibility for use on all wide-body Boeing aircraft
- Full use on Airbus wide-body aircraft as well as the A320 Family
- Safety and reliability
- Unrivalled quality and durability
- Small footprint and greater geometry
- Ergonomic design

TECHNICAL SPECIFICATION

MULTI-PURPOSE PLATFORM STAND

Model-No.	DF071556-03	DF071556-03 XP
Towing speed	10 kph / 6 mph	10 kph / 6 mph
Material type	Ladder: Aluminum Frame: Steel	Ladder: Aluminum Frame: Steel
Dimensions (shipping)	2,026 mm x 2,038 mm x 2,680 mm x 544 kg 79.8 inch x 80.3 inch x 105.5 inch x 1,200 lbs	2,337 mm x 2,039 mm x 2,680 mm x 635 kg 92 inch x 80 inch x 105.5 inch x 1,400 lbs
(Max) possible operators on platform	1	2
Weight	544 kg 1,200 lbs	635 kg 1,400 lbs
Height	Low: 1,854 mm / 73 inch High: 2,616 mm / 103 inch	Low: 1,854 mm / 73 inch High: 2,616 mm x 103 inch
Foot print	2,026 mm x 2,680 mm 79.8 inch x 105.5 inch	2,337 mm x 2,680 mm 92 inch x 105.5 inch
Certifications	ANSI-ASC A14.7, BS EN 131.7 & CE	ANSI-ASC A14.7, BS EN 131.7 & CE
Airbus applications	A300 / A310 **A319 / A320 / A321ceo / neo** A330ceo / neo A340 A350 A380	A300 / A310 **A319 / A320 / A321ceo / neo** A330ceo / neo A340 A350 A380
Boeing applications	B747, B757, B767, B777, B787, B737 NG and MAX	B747, B757, B767, B777, B787, B737 NG and MAX
Other applications	Embraer ERJ	Embraer ERJ

4

LIFTING & SHORING

ATA CHAPTER 07

4.1 FORTEVO TRIPOD-JACKS

DESCRIPTION

Our high-end tripod-jack series for narrow-body aircraft is called FortEvo (FEN). It has been engineered primarily for use in aircraft maintenance. Our FortEvo tripod-jack series has been engineered and developed using state-of-the-art technology. The modular design used throughout allows the tripod-jack to be configured according to customer requirements.

Various configuration options, from the basic to the highend versions, are available in combination with the central Electronic Jacking And Leveling (EJAL) control system for safe operation.

HYDRO TRIPOD-JACKS INCLUDE

- Tripod structure
- Dual manual hydraulic pump with high- and lowpressure unit
- Overload relief valve offers protection against overpressurization
- Pressure indicator in bar and psi + conversion table for kN and metric tons
- Safety lock nut offers protection against unintended pressure relief
- Level for vertical alignment verification
- Feet with fixed ground plates
- Spring-loaded castors with locking mechanism
- Hard chromium plated cylinder tube for long and trouble-free service life
- Interchangeable adapters for additional aircraft types
- Secondary cylinder seal for protection against contaminants and to prolong life of primary seal
- Low-friction seal for uniform piston return
- Skydrol-resistant paint and galvanized plating for corrosion protection
- Movable tow-bar
- Ladder with platform or pedestal (according to jack height)
- Interface for HYDRO proof load equipment
- Factory proof load with 150 % of nominal capacity incl. proof load certificate

BENEFITS

- High quality made in Germany
- Airbus validated
- Long life-cycle
- Robust and proven design
- Secondary cylinder seal for protection against contaminants and to prolong life of primary seal
- At least 10 years spare part availability
- Durability
- Convenient maintenance

TECHNICAL SPECIFICATION

STANDARD TRIPOD-JACK SET A320 FAMILY INCL. NEO

	Wing	Nose	Tail
Model-No.	FEN351	FEN10	FEN06
Capacity	35 t 38.6 tons	10 t 11 tons	6 t 6.6 tons
Min. height	2,400 mm 94.5 inch	1,800 mm 70.9 inch	2,765 mm 108.9 inch
Hydr. lift	1,800 mm 70.9 inch	1,440 mm 56.7 inch	2,000 mm 78.8 inch
Screw ext.	340 mm 13.4 inch	180 mm 7.0 inch	450 mm 17.7 inch
Max. height	4,540 mm 178.7 inch	3,420 mm 134.6 inch	5,215 mm 205.3 inch
Airbus application	**A318** **A319 / A319neo** **A320 / A320neo** **A321 / A321neo**	**A318** **A319 / A319neo** **A320 / A320neo** **A321 / A321neo**	**A318** **A319 / A319neo** **A320 / A320neo** **A321 / A321neo**
Boeing applications		B707 B727 B737 MAX -7 / -8 / -9	B757
Other applications	C-130 MC-21 C919		

TECHNICAL SPECIFICATION

UNIVERSAL NARROW-BODY TRIPOD-JACK SET

	Wing	Nose	Tail
Model-No.	FENT354	FENT101	FEN15
Capacity	35 t 38.5 tons	10 t 11 tons	15 t 16.5 tons
Min. height	1,750 mm 68.9 inch	1,500 mm 59.1 inch	2,600 mm 102.4 inch
Hydr. lift	2,100 mm 82.6 inch	1,985 mm 78.1 inch	1,800 mm 70.9 inch
Screw ext.	660 mm 25.9 inch	450 mm 17.7 inch	250 mm 9.8 inch
Max. height	4,510 mm 177.5 inch	3,935 mm 154.9 inch	4,650 mm 183.0 inch
Application	**A318** **A319 / A319neo** **A320 / A320neo** **A321 / A321neo**	**A318** **A319 / A319neo** **A320 / A320neo** **A321 / A321neo**	**A318** **A319 / A319neo** **A320 / A320neo** **A321 / A321neo**
Boeing application	B727 B737-100 to -900 B737 MAX -7 / -8 / -9	B707 B727 B737-100 to -900 B737 MAX -7 / -8 / -9	B707-120 / B B707-320 / B,C / -420 B707-720 / B B737-100 to -900 B737 MAX -7 / -8 / -9 B757
Other applications	RRJ-95 Embraer 190 / 195 Embraer E190-E2 Embraer E195-E2 MC-21 MD-80 / 90 Dash 8Q-400 C919	MD-90 RRJ-95 MC-21 C919	TU-204 MC-21

AVAILABLE OPTIONS
OVERVIEW

Drive Units	▪ Air-hydraulic pump ▪ Electro-hydraulic pump
Safety lock nut	▪ Manually operated safety lock nut ▪ Automatically operated safety lock nut*
Castors	▪ Spring-loaded swivel castors ▪ Hydraulically height-adjustable swivel castors ▪ Hydraulically height-adjustable high speed outdoor castors
Transportation	▪ Forklift adapter ▪ PowerCat (electrical towing unit) interface
Positioning	▪ Fixed mounted laser target system ▪ Mobile laser target system
Levelling	▪ Automatic Vertical Adjustment Device (AVAD)
Lifting & Lowering	▪ Mechanical stroke measuring system ▪ Electronical stroke measuring system* ▪ Fast lowering system* ▪ Electronic Jacking And Levelling system (EJAL) — synchronized aircraft jacking*
Corrosion Protection	▪ Hard-chromium-plated piston
Load Cell System	▪ Load indication ▪ Overload warning system ▪ A/C weighing — upon request

*only in combination with electro-hydraulic pump

ELECTRONIC-HYDRAULIC PUMP

DESCRIPTION OF OPTIONS

DESCRIPTION

Electrically driven hydraulic pump unit for HYDRO tripod-jack use.

PRODUCT FEATURES

- Electrically driven
- Robust design
- Maximum user comfort and best view to the jacking point area during jacking operation due to the cable connected hand held controller

AVAILABILITY

- Available for all electric narrow- and wide-body HYDRO tripod-jacks

BENEFITS

- Increased operational performance
- Prepared for later update with our EJAL system and automatically operated safety lock nut
- Hand held controller

AUTOMATICALLY OPERATED SAFETY LOCK NUT

DESCRIPTION OF OPTIONS

DESCRIPTION

Electrically driven safety lock nut;
specially designed for HYDRO tripod-jacks.

PRODUCT FEATURES

- Automatically operated safety lock nut during aircraft lifting and lowering operation
- Product requirement: electric driven hydraulic jack
- Electrically driven
- Robust design

AVAILABILITY

- Available for all narrow- and wide body HYDRO tripod-jacks

BENEFITS

- Cost-efficient
- Reduction of man power
- Increased operational performance
- Especially useful for tall tripod-jacks
- Absolutely recommended for tripod-jack systems with a high level of automation
- One-man operation

HYDRAULICALLY HEIGHT-ADJUSTABLE HEAVY-DUTY SWIVEL CASTORS DESCRIPTION OF OPTIONS

DESCRIPTION

Hydraulically height-adjustable swivel castors with central operation unit.

PRODUCT FEATURES

- Simple application
- Central operation of all three castors with hand pumps — close to the bubble level
- Heavy duty swivel casters with brakes for storage and swivel locks for improved towing

AVAILABILITY

- Available for all electric driven narrow- and wide-body HYDRO tripod-jacks
- Recommended for all bigger narrow- and wide-body tripod-jack models from a total weight of 700 kg upwards

BENEFITS

- Increased operational performance — time reduction for jack levelling and positioning
- Higher precision in jack levelling
- Especially useful for big and heavy tripod-jacks
- Increased ground clearance during towing

FORKLIFT ADAPTER DESCRIPTION OF OPTIONS

DESCRIPTION

Forklift adapters allow easy movement of tripod-jacks with a forklift even on bad surfaces or over gaps and cracks.

PRODUCT FEATURES

- Fast and cost-saving way for moving big and heavy tripod-jacks over long distances or onto a truck with a forklift
- Robust welded steel frame
- Simple application

AVAILABILITY

- Available for nearly all narrow- and wide-body HYDRO tripod-jack models

BENEFITS

- Movement of tripod-jack with forklift also on bad surfaces or over gaps and cracks possible
- Increased operational performance

POWERCAT (ELECTRICAL TOWING UNIT) INTERFACE

DESCRIPTION OF OPTIONS

DESCRIPTION

Fast and cost-saving way for moving and positioning of big heavy tripod-jacks or other equipment

PRODUCT FEATURES

- Max. towing capacity 14,000 kg (30,800 lbs)
- All operating elements integrated in the handle / tow-bar (similar to electric powered pallet trucks)
- Battery driven (24 V – 240 Ah)
- Battery charger (option — not part of delivery)
- Different jack adapters available
- Heavy duty rollers
- Simple application

BENEFITS

- Significant reduction of manpower
- Master Mover
- Increased operational performance — time reduction for jack positioning
- Higher precision in jack positioning
- Useful for all heavy tripod-jacks

AVAILABILITY

- Developed and recommended for A380 Main Jacks
- Applicable and adaptive for all other big and heavy HYDRO tripod-jacks

FIXED MOUNTED LASER TARGET SYSTEM

DESCRIPTION OF OPTIONS

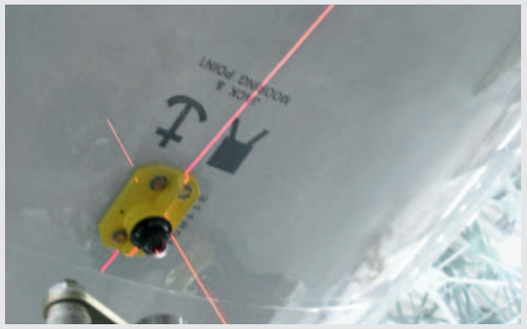

DESCRIPTION

The fixed mounted laser target system allows precise and faster positioning of tripod-jacks for aircraft jacking.

PRODUCT FEATURES

- The system projects a red laser cross for easy positioning of the jack under the aircraft jacking point
- Simple application: activation by push button on jacks handheld controller

AVAILABILITY

- Laser system is available for all HYDRO narrow- and wide-body tripod-jack models
- Available only for electric powered HYDRO tripod-jack models

BENEFITS

- Increased operational performance — time reduction for aircraft jacking
- Higher precision in jack positioning
- Useful for tall tripod-jacks
- Installed on each tripod-jack

MOBILE LASER TARGET SYSTEM

DESCRIPTION OF OPTIONS

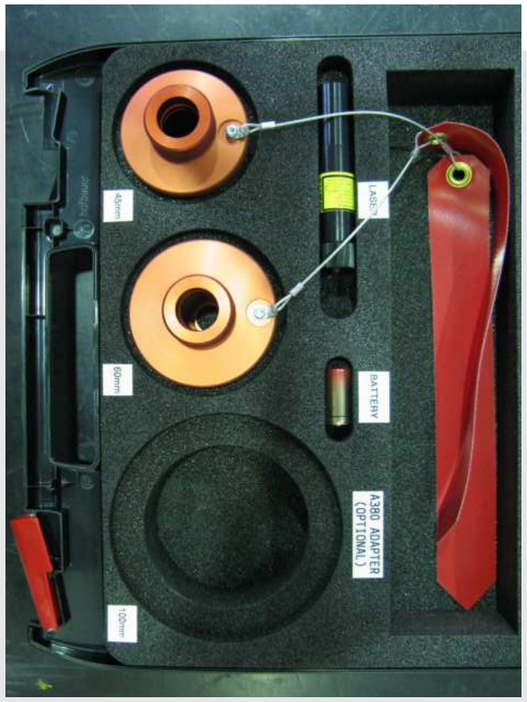

BENEFITS

- Increased operational performance — time reduction for jack levelling and positioning
- Higher precision in jack positioning
- Reduction of manpower
- Useful for tall tripod-jacks
- Universal use on all tall HYDRO tripod-jacks possible

DESCRIPTION

The mobile laser target system allows precise and faster positioning of tripod-jacks for aircraft jacking. It can be universally used on all tall HYDRO tripod-jacks.

PRODUCT FEATURES

- The unit projects a laser cross for easy positioning of the jack under the aircraft jacking point
- Simple application: remove jacking adapter from the jack and replace it with LTS adapter, turn on the laser, level and position the jack under the jacking point. Universal use — system includes two adapters which cover all HYDRO narrow- and wide-body tripod-jack models (excluded optional A380 main jack adapter)
- Battery driven
- Plastic storage and carrying case with foam cushioning (includes space for optional A380 adapter)

AVAILABILITY

- System can be used in combination with all HYDRO narrow and wide-body tripod-jack models (excluded A380 main jack — optional adapter is available)

AVAD (AUTOMATIC VERTICAL ADJUSTMENT DEVICE)

DESCRIPTION OF OPTIONS

BENEFITS

- Automatic fast and precise vertical alignment of tripod-jack at any time during tripod positioning process
- Cost-efficient
- Increased operational performance
- Faster jack positioning
- Absolutely recommended for tripod-jack sets on a high level of automation
- Universal use on all tall HYDRO tripod-jacks possible

DESCRIPTION

The Automatic Vertical Adjustment Device allows auto-matic fast and precise vertical alignment of tripod-jack at any time during the tripod positioning process.

PRODUCT FEATURES

- Fully automated vertical alignment device for the individual tripod-jacks
- Inclination sensor
- Proportional hydraulic valves
- Simple application: activation by push button on jacks handheld controller
- Robust design

AVAILABILITY

- Available for all narrow- and wide-body electric powered HYDRO tripod-jacks which are equipped with hydraulic height adjustable wheels

MECHANICAL STROKE MEASURING SYSTEM

DESCRIPTION OF OPTIONS

DESCRIPTION

The mechanical stroke measurement system moni-tors the working stroke of the hydraulic cylinders of tripod-jacks.

PRODUCT FEATURES

- Mounted outside of the cylinder
- Main components made of aluminum
- Robust and proven design

AVAILABILITY

- Available for all narrow- and wide-body HYDRO tripod-jacks

BENEFITS

- Different jacking levels can be reached repeatable
- Robust and proven design
- Failsafe
- Maintenance free
- Pure mechanical system
- Also usable as a simple synchronous lifting system

ELECTRONICAL STROKE MEASURING SYSTEM

DESCRIPTION OF OPTIONS

DESCRIPTION

The electrical stroke measurement system monitors the working stroke of tripod-jacks hydraulic cylinder. The measured stroke will be shown on a display.

PRODUCT FEATURES

- Measured stroke will be shown on display (if tripod-jack is equipped with) or on EJAL control desk
- Mounted outside of the cylinder
- Robust and proven design
- Only recommended for EJAL systems

BENEFITS

- Different aircraft jacking levels can be reached repeatable
- In conjunction with the EJAL system: measured stroke of each tripod-jack will be transmitted to the control desk. This enables precise synchronous control of all tripod-jacks during aircraft lifting and lowering
- Can also be used for limitation of hydraulic lift to prevent aircraft damage

AVAILABILITY

- Available for all electric narrow- and wide-body HYDRO tripod-jack

FAST LOWERING SYSTEM
DESCRIPTION OF OPTIONS

DESCRIPTION

The Fast Lowering System increases the lowering speed of the hydraulic cylinder of tripod-jacks without load.

PRODUCT FEATURES

- Pressure sensor integrated in the hydraulic system (can also be used for limitation of jacks lifting capacity)
- The fast lowering function is automatically activated when lowering movement is activated and the cylinder- / system-pressure drops under the limit value
- Fast lowering function is automatically deactivated during movement operations of loaded cylinder
- Hydraulic system pressure will be shown on display (if tripod-jack is equipped with)
- Only recommended for tripod-jacks with automati-cally operated safety lock nuts

BENEFITS

- Increased lowering speed of the hydraulic cylinder without load
- Reduction of process time
- Can also be used for limitation of tripod-jacks lifting capacity (maintenance panel required)

AVAILABILITY

- Available for all narrow- and wide-body HYDRO tripod-jacks

ELECTRONIC JACKING AND LEVELLING SYSTEM (EJAL)
DESCRIPTION OF OPTIONS

DESCRIPTION

The EJAL system is a fully automated system for synchronized aircraft lifting and lowering with a tripod-jack set.

PRODUCT FEATURES

- Individual operation of jacks also possible
- Electrical system — universal useable for different tripod-jack sets
- Aircraft inclination sensor
- Touch panel display
- Cable drums with spring return for power supply of tripod-jacks and for main power supply
- Heavy duty casters with brakes
- Robust design
- Simple application

BENEFITS

- Reduction of manpower
- Cost-efficient
- Increased operational performance
- Faster jacking operation
- Permanent control of aircraft inclination
- Minimized risk for the operator and aircraft through synchronized lifting and lowering operation
- Maximum safety
- High level of automation for aircraft lifting and lowering process

AVAILABILITY

- Available for all narrow- and wide-body electric powered HYDRO tripod-jack sets.

4.2 SHORING STANCHION

DESCRIPTION

Our stabilization stanchions for narrow-body aircraft are called "MS". They have been engineered primarily for use in aircraft shoring maintenance.

Lean production and a high production volume enable us to achieve maximum efficiency and value for money with our MS-series.

PRODUCT FEATURES

- Tripod frame with spindle and hand wheel for height adjustment
- Undercarriage with 3 ea swivel casters
- Tripod legs with height-adjustable ground plates via hand wheel
- Tow-bar for towing of the stanchion
- Bubble level indicator
- Stanchion is foldable for easier transportation
- Label with A/C applications
- Skydrol-resistant paint and galvanized plating for corrosion protection
- Interface for HYDRO proof load equipment
- Factory proof load with 150 % of nominal capacity incl. proof load certificate

BENEFITS

- High quality made in Germany
- Long life-cycle
- Robust and proven design
- Ergonomic design
- Very user-friendly and low-maintenance design
- Convenient maintenance
- At least 10 years spare part availability
- On-site service

TECHNICAL SPECIFICATION

STANDARD SHORING STANCHION

Model-No.	MS30	MS43
Capacity	12 t 13.2 tons	10 t 11 tons
Min. height	2,300 mm 90.6 inch	3,000 mm 118.1 inch
Screw ext.	700 mm 27.6 inch	1,000 mm 39.4 inch
Max. height	3,000 mm 118.1 inch	4,000 mm 157.5 inch
Airbus applications	shoring **A318** **A319 / A319neo** **A320 / A320neo** **A321 / A321neo**	shoring **A318** **A319 / A319neo** **A320 / A320neo** **A321 / A321neo**

4.3 AXLE-JACKS | STANDARD AXLE-JACKS (RA-DESIGN)

DESCRIPTION

Our innovative design combines high efficiency with standard components across the series, resulting in reduced maintenance costs and increased versatility.

These jacks are perfect for both narrow and wide body aircraft and are extremely easy to use. The large castors provide increased ground clearance, making maneuverability on most types of surfaces a breeze. And with a robust build that is ideal for outdoor use, these jacks are designed to endure.

Upgrade your aircraft maintenance game with the new RA hydraulic axle-jack from HYDRO Systems KG - versatile, efficient, and built to last.

PRODUCT FEATURES

- Integrated pneumatically-driven hydraulic pump with maintenance unit
- Integrated automatic retraction system for a quick removal of the axle-jack
- Very short extension time to jacking point (full extension in less than 1 minute)
- Manual hand pump (operated by the tow-bar)
- Optimized undercarriage for easy maneuvering
- All functional parts protected by a stainless steel cover against damage during rough operation and weather
- Cover for cylinder
- Tow-bar for operating the jack
- Stainless steel cover: all other parts are Skydrol-resistant painted
- Label with A/C applications
- Factory proof load at 150 % of nominal capacity including proof load certificate

BENEFITS

- High quality made in USA
- Compatible with many aircraft
- Durable for line environment
- Very short extension time
- Long service life
- Robust and proven design
- Easy maneuvering due to optimized undercarriage
- Best handling and extreme repair-friendly due to modular design and available spare parts
- Leak-proof operation because of elements integrated into the oil tank
- Stainless steel cover — all parts are protected against dirt, harsh environment and UV-radiation
- Worldwide unique manufacturing process for the components of the hydraulic cylinder subject to high stress
- Documented verification for each manufacturing step for each part
- At least 10 years spare part availability
- On-site service
- Interface for HYDRO proof-load equipment

TECHNICAL SPECIFICATION

STANDARD AXLE-JACK (RA-DESIGN)

Model-No.	RA4550	RA6050	RA9050	RA10050
Capacity	45 t 49.6 tons	60 t 66.1 tons	90 t 99.2 tons	100 t 110.2 tons
Min. height	190 mm 7.5 inch	246 mm 9.7 inch	260 mm 10.2 inch	275 mm 10.8 inch
Hydr. lift	313 mm 12.3 inch	328 mm 12.9 inch		
Screw ext.	70 mm 2.8 inch	121 mm 4.8 inch		
Max. height	573 mm 22.6 inch	695 mm 27.4 inch	683 mm 26.8 inch	604 mm 23.7 inch
Airbus applications	**NLG** A220-100/ -300, A300-600/ -B2/ -B4, A310-200/ -300, **A319 neo/ -100, A320-200 / neo, A321 neo/ -100/ -200,** A330-200 /-200F/ -300/ -800/ -900, A340-200/ -300, A340-500/ -600, A350-900/ -1000 **MLG** A220-100/ -300, A300-600/ -B2/ -B4, A310-200/ -300, **A319-100, A320 neo/ -200/ -200 4-wheel-bogie, A321-100/ -200**	**NLG** A220-100/ -300, A300-600/ -B2/ -B4, A330-200/ -200F, A330-300/ -800/ -900, A340-200/ -300/ -500/ -600, A350-900/ -1000 **MLG** A220-100/ -300, A300-600/ -B2/ -B4, A310-200, A310-300, **A318-100, A319 neo/ -100, A320 neo, A320-200/ -200 4-wheel-bogie, A321 neo/ -100, A321-200,** A330-200/ -200F/ -300/ -800/ -900 **CLG** A340-200 /-300	**NLG** A220-100/ -300, A300-B2/ -B4, A330-200, A330-200F/ -300/ -700L/ -800/ -900, A340-200/ -300/ -500/ -600, A350-1000/ -900 **MLG** A220-100/ -300, A300-600/ -B2/ -B4, A310-200/ -300, **A319 neo A319-100, A320 neo/ -200/ -200 4-wheel-bogie, A321 neo/ -100 A321-200, A330-200 /-200F/ -300/ -700L/ -800/ -900,** A350-900 **CLG** A340-200 /-300	**NLG** A330-200 /-200F/ -300/ -700L/ -800/ -900, A340-200/ -300/ -500/ -600, A350-900/ -1000 **MLG** A300-600/ -B2/ -B4, A310-200/ -300, **A319 neo/ -100, A320 neo A320-200, A321 neo/ -100/ -200,** A330-200/ -200F/ -300/ -700L, A330-800/ -900, A340-300, A350-900/ -1000

TECHNICAL SPECIFICATION

STANDARD AXLE-JACK (RA-DESIGN)

Model-No.	RA4550	RA6050	RA9050	RA10050
Boeing applications	**NLG** B707-120B/ -220/ -320/ -420/ -131B/ -320B/C/ -720/B, B727-100/ -200, B737-10/ -100/ -200/ -200C/ -300, B737-400/ -500/ -600/ -7/ -700/ -8/ -8200/ -800/ -9, B737-900/ -900ER, B757-200/ -300, B767-200/ -300, B767-300ER/ -400ER, B777-200/ -200ER, B777-200LR/ -200F/ -300/ -300ER/ -8/ -9, B787-8/ -9/ -10 **MLG** B707-120B/ -220/ -320/ -420/ -131B/ -320B/C/ -720/B, B717, B727-100/ -200, B737-10/ -100/ -200/ -200C, B737-300/ -400/ -500/ -600/ -7/ -700/ -8/ -8200/ -800, B737-9/ -900/ -900ER, B747-100/ -200/ -200C/ -300, B757-200/ -300	**NLG** B707-120B/ -220/ -320/ -420/ -131B/ -320B/ C, B707-720/B, B727-100/ -200/ -300/, B747-400/ -400ER/ -8F/ -8I/ SP, B757-200/ -300, B767-200/ -300/ -400ER, B777-200/ -200ER/ -200F/ -300/ -200LR/ -300ER/ -8/ -9, B787-10/ -8/ -9 **MLG** B707-120B/ -220/ -320/ -420/ -131B/ -320B/ C/ -720/ B, B717, B727-100/ -200, B737-10/ -100/ -200/ -200C/ -300/ -400/ -500/ -600, B737-7/ -8/ -8200/ -800/ -9/ -900/ -900ER, B747-100/ -200/ -200C/ -300/-400/ -400ER/ SP, B757*-200/ -300, B767-200/ -300/ -300ER, B767-400ER, B787-10/ -8/ -9	**NLG** B727-100/ -200, B747-100/ -200/ -300/ -400, B747-400ER/ -8F/ -8I/ SP, B757-200/ -300, B767-200/ -300/ -300ER/ -400ER, B777-200/ -200ER/ -200LR/ -200F, B777-300/ -300ER/ -8/ -9, B787-8/ -9/ -10 **MLG** B707-120B/ -220/ -320/ -420/ -131B/ -320B/C/ -720/B, B727-100, B727-200, B737-10/ -100/ -200/ -200C/ -300/ -400/ -500/ -600, B737-7/ -700/ -8/ -8200/ -800/ -9/ -900/ -900ER, B747-100/ -200, B747-200C/ -300/ -400/ -400ER/ -8F/ -8I/ SP, B757-200/ -300, B767-200/ -300/ -300ER/ -400ER, B777-200/ -200ER, B777-200LR/ -200F/ -300/ -300ER/ -8/ -9, B787-8/ -9/ -10	**NLG** B727-100/ -200, B767-200/ -300/ -300ER/ -400ER, B777-200/ -200ER/ -300/ -200LR/ -200F/ -300ER/ -8/ -9, B787-8/ -9/ -10 **MLG** B707-120B/ -220/ -320/ -420/ -131B/ -320B/C/ -720/B, B727-100/ -200, B737-10/ -100/ -200/ -200C/ -300/ -400/ -500, B737-600/ -7/ -700/ -8 /-8200/ -800/ -9/ -900/ -900ER, B747-100/ -200/ -200C/ -300/ -400/ -400ER/ -8F/ -8I/ SP, B757-200/ -300, B767-200/ -300/ -300ER/ -400ER/ B777-200, B777-200ER/ -300/ -200LR/ -200F/ -300ER/ -8/ -9, B787-8/ -9/ -10
Other applications	**NLG** DC-10 Series 10/ 15/ 30/ 40, EMBRAER 170/ 175, EMBRAER 190/ 195, L-1011-01/ -100/ -200/ -500, MC-21, MD-11 **MLG** C919, DC-10 Series 10/ 15, EMBRAER 170/ 175/ 190/ 195, Fokker 100/ 50, MC-21, MD-80/ -90, RRJ-95	**NLG** L-1011-01/ -100/ -200 **MLG** DC-10 Series 10/ 15/ 30/ 40, EMBRAER 190/ 195, L-1011-01/ -100/ -200/ -500, MC-21, MD-11	**MLG** DC-10 Series 10/ 15/ 30/ 40 L-1011-01/ -100/ -200/ -500 MC-21, MD-11	**MLG** DC-10 Series 10/ 15/ 30/ 40 L-1011-01/ -100/ -200/ -500 MC-21, MD-11

4.4 AXLE-JACKS | STANDARD AXLE-JACKS (RT-DESIGN)

DESCRIPTION

Our standard axle-jack series called "RT" has been engineered primarily for use in aircraft maintenance. The series can be used with most common narrow-body and wide-body aircraft types.

The RT axle-jacks have been developed with the latest state of technology. Our axle-jacks are built to withstand the harshest environmental conditions and rugged use. Safety and "Made in Germany" quality have the highest priority.

The RT axle-jacks offer optimum performance for professional use.

PRODUCT FEATURES

- Integrated pneumatically-driven hydraulic pump with maintenance unit
- Integrated automatic retraction system for a quick removal of the axle-jack
- Very short extension time to jacking point (full extension in less than 1 minute)
- Manual hand pump (operated by the tow-bar)
- Optimized undercarriage for easy maneuvering
- All functional parts protected by a stainless steel cover against damage during rough operation and weather
- Cover for cylinder
- Tow-bar for operating the jack
- Stainless steel cover: all other parts are Skydrol-resistant painted
- Label with A/C applications
- Factory proof load at 150 % of nominal capacity including proof load certificate

BENEFITS

- High quality made in Germany
- Long service life
- Robust and proven design
- Easy maneuvering due to optimized undercarriage
- Best handling and extreme repair-friendly due to modular design and available spare parts
- Leak-proof operation because of elements integrated into the oil tank
- Stainless steel cover — all parts are protected against dirt, harsh environment and UV-radiation
- Worldwide unique manufacturing process for the components of the hydraulic cylinder subject to high stress
- Documented verification for each manufacturing step for each part
- At least 10 years spare part availability
- On-site service
- Interface for HYDRO proof-load equipment

AVAILABLE ACCESSORIES
TRANSPORT TROLLEY

Single Transport Trolley SG158

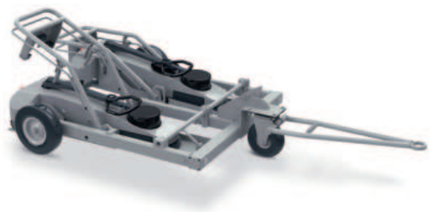

Twin Transport Trolley SG169
(Only necessary for 3 axis landing gears)

Wheel Refill Unit

Tire inflation gauge RFM940RF80-25

Hose lines:

- for small tire valves VG8 - NB A/C's (00180-104-000)
- for big tire valves VG12 - WB A/C's (00180-106-000)

Maintenance

Interface for HYDRO proof load equipment

Fly-Away Version

Shorter and lighter version of the standard RT axle-jack model

TECHNICAL SPECIFICATION

STANDARD AXLE-JACK (RT-DESIGN)

Model-No.	RT4550	RT6050
Capacity	45 t 49.6 tons	60 t 66.1 tons
Min. height	190 mm 7.5 inch	246 mm 9.7 inch
Hydr. lift	313 mm 12.3 inch	328 mm 12.9 inch
Screw ext.	70 mm 2.8 inch	121 mm 4.8 inch
Max. height	573 mm 22.6 inch	695 mm 27.4 inch

TECHNICAL SPECIFICATION

STANDARD AXLE-JACK (RT-DESIGN)

Model-No.	RT4550	RT6050
Airbus applications	**NLG** A220-100/-300 A300, A310 **A318** **A319 / A319neo** **A320 / A320neo** **A321 / A321neo** A330-200 / -200F / -300 / -800 / -900 A340-200 / -300 / -500 / -600 A350-900 / -1000 **MLG** A220-100 / -300 A300, A310 **A318** **A319 / A319neo** **A320 / A320neo** **A321 / A321neo**	**NLG** A220-100 / -300 A300 A310 A330-200 / -200F / -300 / -800 / -900 A340-200 / -300 / -500 / -600 A350-900 / -1000 **MLG** A220-100 / -300 A300, A310 **A318** **A319 / A319neo** **A320 / A320neo** **A321 / A321neo** A330-200 / -200F / -300 / -800 / -900 A340-200/-300 A350-900 **CLG** A340-200/-300 A340-500/-600
Boeing applications	**NLG** B707, B727 B737-300 to -900 B737 MAX -7/-8/-9 B757-200 / -300 B767-200 / -300 / -400ER B777-200 / -200ER / -300 / -200LR / -300ER / -9 B787-8 / -9 / -10 **MLG** B707, B717, B727 B737-300 to -900 B737 MAX -7/-8/-8200/-9 B757-200 / -300	**NLG** B707, B727-100 / -200 B747-100 / -200 / -300 B747-400 / -400ER / -8 B757-200 / -300 B767-200 / -300 / -400ER B777-200 / -200ER / -300 B777-200LR / -300ER / -9 B787-8 / -9 / -10 **MLG** B707, B717, B727-100 / -200 B737-300 to -900 B737 MAX -7/-8/-8200/-9 B747-100 / -200 / -300 / -400 / -400ER B757-200 / -300 B767-200 / -300 / -400ER B787-8 / -9 / -10
Other applications	**NLG** DC10, MD11 Embraer 170 / -175 / -190 / -195 L1011, MC21 **MLG** Embraer-170 / -175 / -190 / -195 Fokker 50 / -100 MD80, MD90 MC-21, RRJ95 C919	**NLG** DC10 / MD11 L-1011 **MLG** DC10 / MD11 L-1011, MC-21, RRJ-95 EMB190 / -195, Fokker 50 **CLG** MD11

4.5 AXLE-JACKS | UNIVERSAL AXLE-JACKS (RC-DESIGN)

DESCRIPTION

Our fly-away axle-jack series called "RC" has been engineered primarily for use in aircraft maintenance.

The series can be used with most common narrow-body and wide-body aircraft types. The RC axle-jacks have a compact and modular design used throughout that allows them to be configured according to your specific requirements. Our products are built to withstand harsh environmental conditions and rugged use. Safety and "Made in Germany" quality have the highest priority. The RC axle-jacks offer optimum performance for professional use.

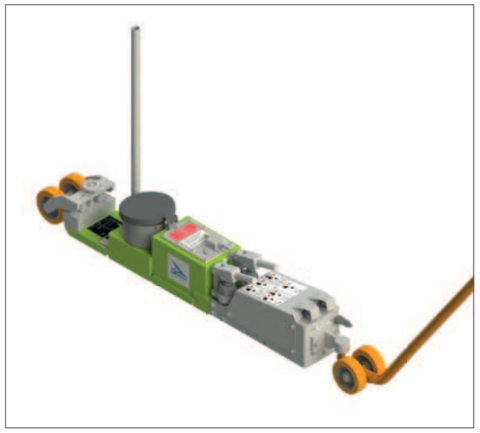

PRODUCT FEATURES

- Hand pump with low and high pressure unit
- Nitrated cylinders and rams to guarantee a long and trouble-free life
- With two wheels and a handle bar, for transportation on the ground (not for all models)
- All non-painted parts galvanized
- Factory proof load at 150 % of nominal capacity including Proof Load Certificate
- Skydrol-resistant paint; all other parts are plated for corrosion protection
- Label with A / C applications
- Interface for HYDRO proof load equipment

AVAILABLE ACCESSORIES

Drive Units

- Air-hydraulic pump

Castors

- Spring loaded castors with dampened tow-bar
- Spring loaded castors with tow-bar

BENEFITS

- High quality made in Germany
- Long service life
- Robust and proven design
- Easy maneuvering by one person
- At least 10 years spare part availability
- On-site service

TECHNICAL SPECIFICATION

UNIVERSAL AXLE-JACK (RC-DESIGN)

Model-No.	RC4509	RC6010
Capacity	45 t 50 tons	60 t 66.1 tons
Min. height	190 mm 7.5 inch	246 mm 9.7 inch
Hydr. lift	313 mm 12.3 inch	328 mm 12.9 inch
Screw ext.	70 mm 2.8 inch	121 mm 4.8 inch
Max. height	573 mm 22.6 inch	695 mm 27.4 inch
Airbus applications	**NLG** A220-100/ -300 A300/ A310 **A318** **A319 / A319neo** **A320 / A320neo** **A321 / A321neo** A330-200/ -300 A340-200/ -300/ -500/ -600 A350-900/ -1000 **MLG** A220-100/ -300 A300/ A310 **A318** **A319 / A319neo** **A320 / A320neo** **A321 / A321neo**	**NLG** A220-100/ -300 A300 / A310 A330-200/ -200F/ -300/ -800/ -900 A340-200 / -300/ -500/ -600 A350-900/ -1000 **MLG** A220-100/ -300 A300 / A310 **A318** **A319 / A319neo** **A320 / A320neo** **A321 / A321neo** A330-200/ -200F/ -300/ -800/ -900 A340-200/ -300 A350-900 **CLG** A340-200/-300 A340-500/-600

4.6 AXLE-JACKS | FLY-AWAY AXLE-JACKS (RH-DESIGN)

DESCRIPTION

Our hand-carry axle-jack series called "RH" has been engineered primarily for use in aircraft maintenance. The series can be used with most common narrow-body and wide-body aircraft types.

The RH axle-jacks are a smaller version of the RC axle-jacks and designed for carrying by one person. Our products are built to withstand harsh environmental conditions and rugged use. Safety and "Made in Germany" quality have the highest priority. The RH axle-jacks offer optimum performance for professional use.

PRODUCT FEATURES

- Single manual hand pump
- Nitrated cylinders and rams to guarantee a long and trouble-free life
- Grab handle for hand transportation
- Fixed undercarriage for easy manoeuvring
- With two wheels and handle bar, for transportation on the ground
- Skydrol-resistant paint; all other parts are galvanized for corrosion protection
- Label with A/C applications
- Interface for HYDRO proof load equipment

AVAILABLE ACCESSORIES

- Wooden box
- Aluminium box
- Air-hydraulic pump

BENEFITS

- High quality made in Germany
- Long life-cycle
- Robust and proven design
- Easy maneuvering by one person
- At least 10 years spare part availability
- On-site service

TECHNICAL SPECIFICATION

FLY-AWAY AXLE-JACK (RH-DESIGN)

Model-No.	RH1606	RH1029
Capacity	16 t 17.6 tons	10 t 11.0 tons
Min. height	158 mm 6.2 inch	145 mm 5.7 inch
Hydraulic lift	172 mm 6.8 inch	265 mm 10.4 inch
Screw ext.	60 mm 2.4 inch	40 mm 1.6 inch
Max. height	390 mm 15.4 inch	450 mm 17.7 inch
Airbus applications	**NLG** A220 **A318** **A319** **A319neo** **A320** **A320neo** **A321** **A321neo**	**NLG** A220 A320 A320neo A321
Boeing applications	**NLG** B737 all B737 MAX	**NLG** B717, B737-600 to -900 B737 MAX (-7/-8/-8200/-9)
Other applications	**NLG** Embraer 170 to 195 RRJ-95 AN-140 Fokker 50 Fokker 100 DC-9 Falcon 6X/7X/8X **MLG** CRJ-100/200 YAK-152 Falcon 6X/7X/8X	**NLG** BAe146, AVRO RJ CRJ-700/-900, Dash8-Q400 CS100,CS300, DC9 Embraer 170 to175 Embraer 190 to 195 Fokker 28/50/100 MC-21, MD80, MD90 RRJ-95 **MLG** AN-140 ATR 42 CRJ-100/-200 Fokker F50 YAK-152

4.7 AXLE-JACKS | RECOVERY AXLE-JACK (RL-DESIGN)

DESCRIPTION

Our recovery axle-jack series called "RL" has been engineered primarily for use in aircraft recovery maintenance tasks. The series can be used with most common narrow-body and wide-body aircraft types. The key feature of the RL axle-jack is the extremely low lifting point. Our products are built to withstand harsh environmental conditions and rugged use. Safety and "Made in Germany" quality have the highest priority. The RL recovery jacks offer optimum performance for professional use.

PRODUCT FEATURES

- Hand pump with low and high pressure unit
- Ram set salt-bath nitrided and polished
- Manually operated safety lock nut
- Force indicator, e.g. bar/kN, bar, psi
- Tow-bar
- Interface for HYDRO proof load equipment
- Height-adjustable undercarriage
- Skydrol-resistant paint
- Label with A/C applications
- Interface for HYDRO proof load equipment
- Factory proof load at 150 % of nominal capacity, including proof load certificate

BENEFITS

- High quality made in Germany
- Long life-cycle
- Robust and proven design
- Easy maneuvering due to optimized undercarriage
- At least 10 year spare part availability

TECHNICAL SPECIFICATION

RECOVERY AXLE-JACK (RL-DESIGN)

Model-No.	RL6011
Capacity	60 t 66 tons
Min. height	67 mm 2.64 inch
Hydraulic lift	613 mm 24.1 inch
Max. height	680 mm 26.77 inch
Airbus applications	**NLG** **A220-100, A220-300, A300-600, A300-B2, A300-B4, A310-200,A310-300, A318, A318-100, A319 neo, A319-100 /CJ, A320-200 / neo, A321 neo, A321-100 /-200,** A330-200 /-200F, A330-300, A330-800, A330-900, A340-200, A340-300, A340-500, A340-600, A350-1000, A350-900 **MLG** A220-100, A220-300, A300-600, A300-B2, A300-B4, A310-200, **A310-300, A318-100, A319 neo, A319-100 /CJ, A320-200 / neo, A320-200 4 wheel boogie, A321 neo, A321-100 /-200, A330-200 /-200F, A330-300, A330-800, A330-900, A340-200, A340-300** **CLG** A340-200, A340-300, A340-500, A340-600
Boeing applications	**NLG** B707-120B/ -220/ -320/ -420, B707-131B/ -320B/C, B707-720/ B, B717, B727-100, B727-200, B737-100, B737-200/ -200C, B737-300/ -400/ -500, B737-600/ -700/ -800/ -900, B737-7 /-8 /-82/ -9/ -10, B737-7/8/8200, B737-9, B747-100/ -200/ -300, B747-400, B747-400ER, B747-8F, B747-8I, B757-200, B757-300, B767-200/ -300/-300ER, B767-400ER, B777-200/ -200ER/ -300, B777-200LR/ -300ER, B777-8 /-9, B787-10, B787-8, B787-9 **MLG** B707-131B/ -320B/ C, B707-720/B, B717, B727-100, B727-200, B737-100, B737-200/ -200C, B737-300/ -400/ -500, B737-600/ -700/ -800/ -900, B737-7 /-8 /-82/ -9/ -10, B737-7/8/8200, B737-9, B747-100/ -200/ -300, B747-400, B747-400ER, B757-200, B757-300, B767-200/ -300/ -300ER, B767-400ER, B787-10, B787-8, B787-9
Other applications	**NLG** C919, DC-10 Series 10/ 15, DC-10 Series 30/ 40, DC-9, EMBRAER 170/ 175, EMBRAER 190/ 195, L-1011-01/ -100/ -200, L-1011-500, MC-21, MD-11, MD-80, MD-90 **MLG** C919, DC-10 Series 10/ 15, DC-10 Series 30/ 40, DC-9, EMBRAER 170/ 175, EMBRAER 190/ 195, L-1011-01/ -100/ -200, L-1011-500, MC-21, MD-11, MD-80, MD-90, RRJ-95

4.8 RECOVERY AXLE-JACK BEAM

DESCRIPTION

The universal 16 t recovery beam is specially designed for use in jacking the A320/ B737 NLG in emergency dual flats or on rim conditions.

The 16 tons recovery beam will work in conjunction with two axle-jacks.

The recovery beam kit is the alternative solution for recovery jacks.

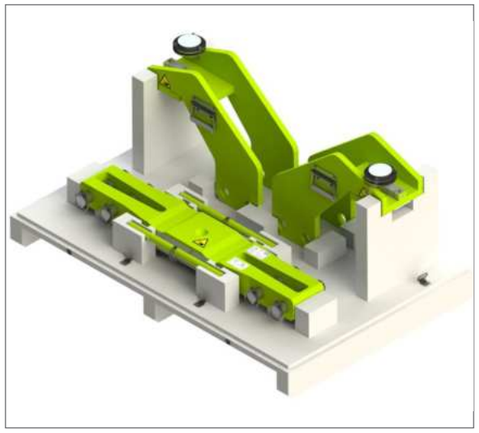

PRODUCT FEATURES

- Recovery beam with a capacity of 16 tons
- Interface to axle-jacking point
- Four handles for ease of handling
- Castors for easy positioning
- Two bubble level indicator for horizontal lifting
- Two floating axle-jack interfaces for side load compensation
- Fly away transport box with fork lift pockets
- Easy and fast setup
- Skydrol-resistant paint
- 150 % proof loaded

BENEFITS

- Quick and easy to set up
- Can be used with various axle-jack series
- Integrated side load compensation
- Flexible and universal solution
- Quickly available and transportable via box
- Meeting the maintenance needs of tomorrow
- High premium quality made in Germany

TECHNICAL SPECIFICATION

RECOVERY AXLE-JACK BEAM

Model-No.	RAJB1601
Capacity	16 t 17.6 tons
Height	85 mm 3.4 inch
Width	180 mm 7.1 inch
Length total	1,505 mm 59.25 inch
Weight adapter l/r	35 kg 77.2 lbs
Weight beam	75 kg 165.3 lbs
Airbus applications	**NLG** **A318** **A319/ A319neo** **A320/ A320neo** **A321/ A321neo**
Boeing applications	**NLG** B737 Family incl. MAX

4.9 AXLE-JACK HOSE PRESSURE KIT

HYDRO PARTNER PRODUCT NEWBOW AEROSPACE GROUND SUPPORT EQUIPMENT

DESCRIPTION

The axle-jack hose pressure kit is primarily designed to allow the aircraft tyre gas to operate the axle jack.

The axle-jack hose kit features an overall length of 4-meters to allow good flexibility around the aircraft when changing the wheel and operating the axle jack as well as allowing a safe working distance for the operator.

Equipped with an integrated isolation valve, the operator can accurately control the gas flow from the wheel to the axle jack making for a safe operation. The hose features a safe screw-on valve adapter which interfaces with the aircraft wheel offering added safety to the user when working with high pressure gases.

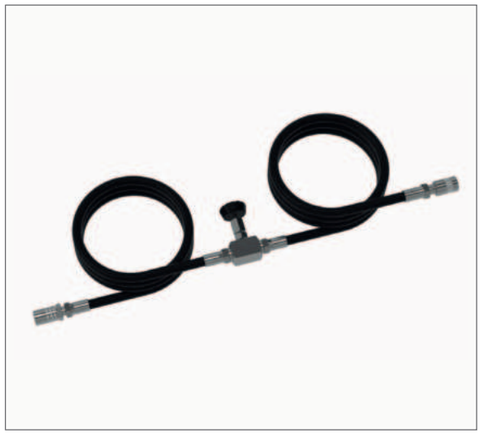

PRODUCT FEATURES

- 4-meter length hose
- Isolation valve to control gas flow
- Double braided hose with rubber covering
- Safe screw-on tyre valve adapter

AVAILABLE ACCESSORIES

- Fitment to 8 V size tire valves and axle-jack
- Fitment to 12 V size tire valves and axle-jack
- Fitment to 8 V and 12 V size tire valves and axle-jack

BENEFITS

- Optimal efficiency
- Accurate gas flow control
- Allows the operator flexibility when in use

TECHNICAL SPECIFICATION

AXLE-JACK HOSE PRESSURE KIT

Model-No.	PO-54665	PO-54665-1	PO-54665-SL
Variant	Small tyre valve to axle-jack hose kit	Large tyre valve to axle-jack hose kit	Small and large size tyre valves to axle-jack kit

4.10 STEERING TEST EQUIPMENT

DESCRIPTION

The special axle-jack allows the lifting of the nose landing gear for the execution of the GTI Nose Wheel Steering.

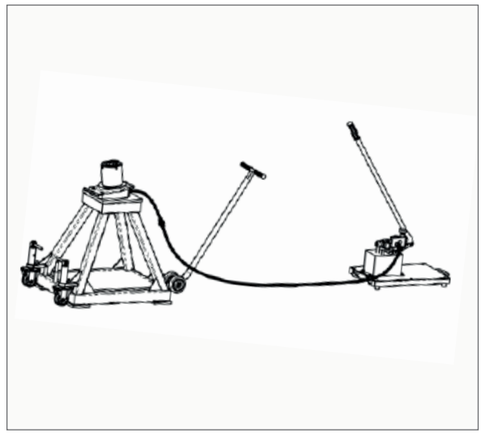

PRODUCT FEATURES

- Special axle-jack with angeled cylinder
- External seperate manual hand pump
- Max. load of 100kN (11.2 short tons)
- Tow-bar for operating the axle-jack

BENEFITS

- High quality made in Germany
- Long life-cycle
- Robust and proven design
- Easy maneuvering
- At least 10 year spare part availability
- On-site service

TECHNICAL SPECIFICATION

STEERING TEST EQUIPMENT

Model-No.	SG196
Capacity	100 kN (11.2 short tons)
Applications	A318 A319 / A319neo A320 / A320neo A321 / A321neo

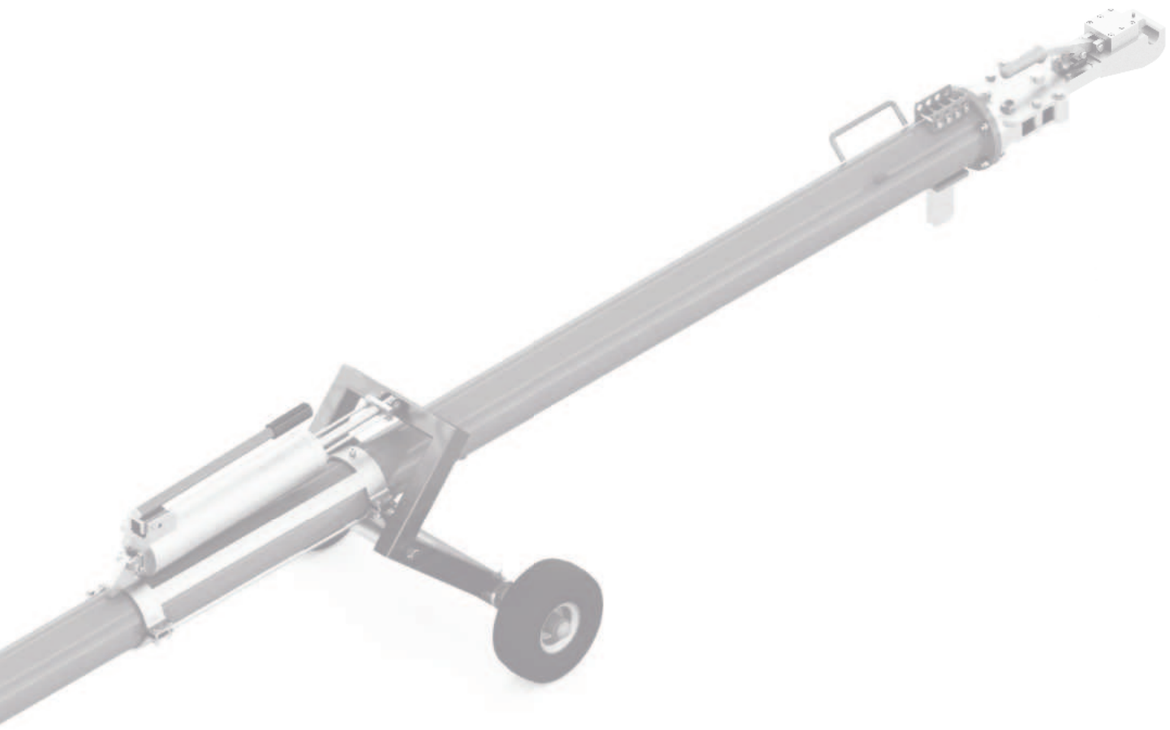

5

TOWING & TAXING

ATA CHAPTER 09

5.1 TOW BAR (STANDARD)

DESCRIPTION

Our standard tow-bar series for most common commercial, business and military aircraft is called "TOW". It has been engineered primarily for use in aircraft maintenance.

This standard tow-bar covers one dedicated aircraft type. Our tow-bars are designed in accordance with the requirements from aircraft manufacturers and the applicable norms and standards.

They fit perfectly to the operator's needs. The free-floating axle enables easy connection to the NLG. The maintenance-free hand pump with integrated spring and dead man's circuit guarantees high safety and outstanding accuracy. Customers all over the world trust in the outstanding quality made in Germany.

PRODUCT FEATURES

- Revolving tow-head
- Rigid tow eye diameter 3 inch/ 76.2 mm
- Main tube made of high strength steel
- Maintenance free hand pump with integrated spring and dead man circuit for high safety
- Shear pin for push/ pull and torque and retaining pin for maximum safety
- Hydraulically height-adjustable undercarriage with floating axle system and pneumatic tires
- Tube-mounted spare shear pin holder incl. four spare shear pins and two retaining pins
- Skydrol-resistant paint
- Label with A/C applications

OPTIONS

Tow-eye
- Revolving tow eye

Undercarriage
- Height-adjustable undercarriage with solid rubber tires

BENEFITS

- High quality made in Germany
- Designed to norms
- Long life-cycle
- Ergonomic design
- Worldwide unique new hand pump system
- All in one system (integrated cylinder, hand pump, oil reservoir and return spring)
- Encapsulated hydraulic system (no rubber hoses, no fittings)
- Death man circuit
- Maintenance free
- Fast and easy replacement of the hand pump
- Wide range of available options
- Easy maneuvering due to optimized undercarriage with integrated floating axle system
- Tow-head design integrated shear pins and retaining pin
- At least 10 year spare part availability
- On-site service

TECHNICAL SPECIFICATION

TOW-BAR (STANDARD)

Model-No.	TOWA320S
Length	5,720 mm 1225.2 inch
Weight	260 kg 573.2 lbs
Towing speed with A/C	15 km/h 9 mph
Towing speed w/o A/C	925 km/h 15.5 mph
Airbus applications	**A318** **A319 / A319neo** **A320 / A320neo** **A321 / A321neo**

5.2 TOW-BAR (UNIVERSAL)

DESCRIPTION

Our universal tow-bar series for most common narrowbody and wide-body aircraft is called "TOWUNIV". It has been engineered primarily for use in aircraft maintenance.

This universal tow-bar covers several aircraft types. Our tow-bars are designed in accordance with the requirements from aircraft manufacturers and the applicable norms and standards.

They perfectly match the operator's needs and fit various aircraft types. The free-floating axle enables an easy connection to the nose landing gear. The maintenance-free hand pump with integrated spring and dead man's circuit guarantees high safety and outstanding accuracy. Customers all over the world trust in the outstanding quality made in Germany.

PRODUCT FEATURES

- Revolving tow head
- Rigid tow eye diameter 3 inch / 76.2 mm
- Main tube made of high strength steel
- Maintenance free hand pump with integrated spring and dead man's circuit for high safety
- Shear pin for push / pull and torque and retaining pin for maximum safety
- Tube-mounted spare shear pin holder including four spare shear pins
- Skydrol-resistant paint
- Label with A/C applications

OPTIONS

Tow Eye

- Rigid tow eye
- Revolving tow eye
- Revolving tow eye with damper

Undercarriage

- Height-adjustable undercarriage with solid rubber tires
- Height-adjustable undercarriage with pneumatic tires

BENEFITS

- High quality made in Germany
- Designed to norms
- Long life-cycle
- Ergonomic and light design
- Easy maneuvering due to convertible undercarriage
- Tow head design: integrated shear pins and retaining pin
- At least 10 year spare part availability
- On-site service

TECHNICAL SPECIFICATION

TOW-BAR (UNIVERSAL)

Model-No.	TOWUNIV3	TOWUNIV9
Length	5,300 mm 208.7 inch	5,270 mm 207.5 inch
Weight	258 kg 568.8 lbs	267 kg 588.6 lbs
Towing speed with A/C	15 km/h 9 mph	15 km/h 9 mph
Towing speed w/o A/C	25 km/h 15.5 mph	25 km/h 15.5 mph
Airbus application	A318 A319 / A319neo **A320 / A320neo** A321 / A321neo	A318 A319 / A319neo **A320 / A320neo** A321 / A321neo
Boeing applications	B737-300 to 900 B737 MAX	
Embraer applications		E190 (E2) E195 (E2)

5.3 TOW-BAR (FLY-AWAY)

DESCRIPTION

Our fly-away tow-bar series has been designed for most common commercial, business and military aircraft. It has been engineered primarily for use in aircraft maintenance. This fly-away tow-bar covers one dedicated aircraft type, is weight optimized and easily to disassemble.

Our tow-bars are designed in accordance with the requirements from aircraft manufacturers and the applicable norms and standards. They fit perfectly to the operator's needs. Customers all over the world trust in the outstanding quality made in Germany.

PRODUCT FEATURES

- Rigid tow head
- Rigid tow eye diameter 3 inch / 76.2 mm
- Main tube made of high strength steel
- Shear pin for push / pull and torque and retaining pin for maximum safety
- Convertible undercarriage for easy handling
- Skydrol-resistant paint
- Label with A / C applications

AVAILABLE ACCESSORIES

Transportation Box

- Plastic case (33066-009-000)
- Aluminum box (00181-102-000)

BENEFITS

- High quality made in Germany
- Designed to norms
- Long service life
- Ergonomic and light design
- Easy maneuvering due to convertible undercarriage
- Tow-head design integrated shear pins and retaining pin
- At least 10 years spare part availability
- On-site service

TECHNICAL SPECIFICATION

TOW-BAR (FLY-AWAY)

Model-No.	TOWA320F
Length	3,200 mm 126 inch
Weight	67 kg 147.7 lbs
Towing speed with A/C	15 km/h
Applications	A318 A319 / A319neo A320 / A320neo A321 / A321neo

5.4 RECOVERY KIT

DESCRIPTION

Our Recovery Kit has been designed for cable towing of the main landing gear, especially for aircraft recovery.

PRODUCT FEATURES

- Equipment is for recover A/C at MLG in case of emergency
- System integrated shearpins for overload protection
- All kit-parts stored in a wooden box

BENEFITS

- Ergonomic design
- User friendliness

TECHNICAL SPECIFICATION

RECOVERY KIT

Model-No.	SG237-003
Airbus applications	A318 A319 A320 A321 (Single axle)
Boeing applications	B737 incl. MAX

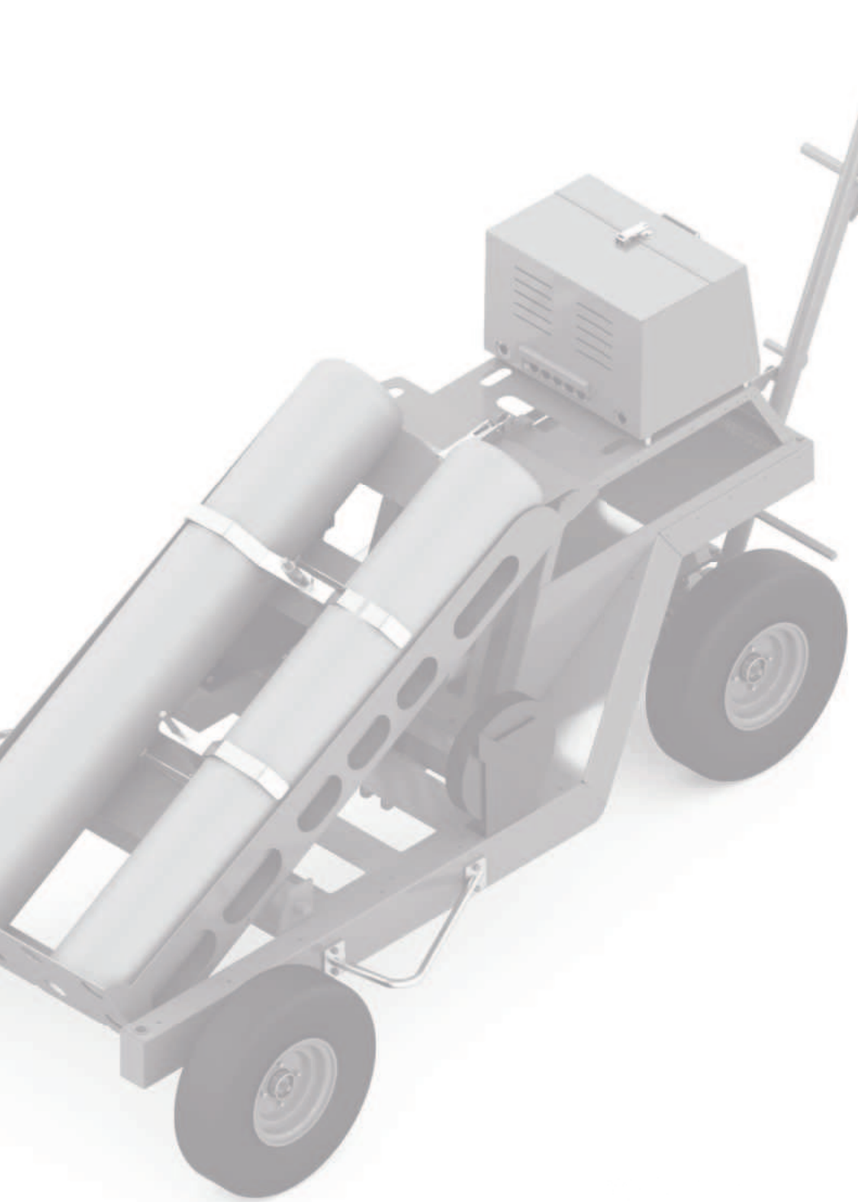

6

SERVICING

ATA CHAPTER 12

6.1 NITROGEN SERVICE CART

HYDRO PARTNER PRODUCT NEWBOW AEROSPACE GROUND SUPPORT EQUIPMENT

DESCRIPTION

The Nitrogen service cart is available as two or four bottle variants, the unique design allows all nitrogen cylinders to be loaded or off-loaded simultaneously by a single person. This specific design incorporates all relevant occupational health and safety requirements for manual handling and allows operators to undertake their desired tasks safely and efficiently.

The dual use colour coded low and high pressure certified nitrogen charging panel housed within a waist-height weather-proof cabinet features one calibrated inlet pressure gauge, one calibrated low outlet pressure gauge and one calibrated high outlet pressure gauge.

The low pressure 330 psi and high pressure, 3,300 psi nitrogen charging configuration is operated by self-venting regulators, secondary isolation valves and features built-in excess pressure relief valves, allowing for optimum pressure settings to be achieved when undertaking nitrogen servicing and replenishment tasks.

PRODUCT FEATURES

- Self-venting regulators and secondary isolation valves
- Auto retractable hose reels each with 9-metre hose
- Easy load cylinder stowage tray (manual operation for 2-bottle variant and hydraulic operation for 4-bottle variant)
- 50 mm towing eye
- Ground Support Equipment BS EN compliant
- Spare parts and components readily available
- Finish: Zinc phosphate primer with top layer powder-coat finish
- Modular charging system
- Easy-load system
- Safety and reliability
- Unrivalled quality
- Ergonomic design
- On-site service

OPTIONS

- 2-bottle variant or 4-bottle variant
- Fully fitted gas booster allows intensified outlet pressure & full cylinder consumption
- In-situ cylinder re-fill port - Integrated re-fill port allows cylinder refill without removing cylinders
- Any color paint finish - RAL code is required to allow for different paint color
- Different size towing eye
- Weather-proof cover

AVAILABLE ACCESSORIES

Country compatible cylinder connectors

- UK Nitrogen bottle connection
- German Nitrogen bottle connection
- French Nitrogen bottle connection
- USA/North America/Singapore bottle connection

BENEFITS

- Modular charging system
- Dual use charging system; Low pressure and high pressure charging systems are integrated inside a single box
- Easy-load system
- Pressure relief and isolation valves
- Safety and reliability
- Unrivalled quality
- Ergonomic design
- On-site service

TECHNICAL SPECIFICATION

NITROGEN SERVICE CART

Model-No.	NBNT-2 (two bottle cart) NBNT-4 (four bottle cart)
Lenght	2,700 mm 106.3 inch
Width	1,324 mm 52.1 inch
Height	1,441 mm 56.7 inch

6.2 OXYGEN SERVICE CART

HYDRO PARTNER PRODUCT NEWBOW AEROSPACE GROUND SUPPORT EQUIPMENT

DESCRIPTION

The Oxygen service cart is available as two or four bottle variants, the unique design allows all oxygen cylinders to be loaded or off-loaded simultaneously by a single person. This specific design incorporates all relevant occupational health and safety requirements for manual handling and allows operators to undertake their desired tasks safely and efficiently.

The certified charging panel is housed within a waist-height weatherproof cabinet and features one calibrated inlet pressure gauge and one calibrated outlet pressure gauge. To minimize static and heat-build up from fast flowing oxygen bottle gas, the charging panel inlet features heavy-duty brass heat-soak stems along with oxygen grade hose and piping.

The charging configuration (2,400 psi) is operated by a self-venting regulator, secondary isolation valve and features a built-in excess pressure relief valve allowing optimum pressure settings to be achieved. All components associated with the oxygen service cart are oxygen cleaned, certified and traceable. The 4-bottle easy load oxygen cart features inert, xygen safe fluid within the hydraulic cylinder tray operating system.

PRODUCT FEATURES

- Self-venting regulator and secondary isolation valve
- Auto retractable hose reel with 9-metre hose
- Easy load cylinder stowage tray (manually operation for 2-bottle variant and hydraulic operation for 4-bottle variant)
- Earth grounding reel and cable
- 50 mm towing eye
- Ground Support Equipment BS EN Compliant Spare parts and components readily available
- Finish; Zinc phosphate primer with top layer powder-coat finish in RAL1028 (yellow)
- Modular charging system
- Self-venting regulator
- Easy-load system
- Pressure relief and isolation valves
- Heat soak
- Safety and reliability
- Unrivalled quality
- Ergonomic design
- On-site service

OPTIONS

- 2-bottle variant or 4-bottle variant
- Fully fitted gas booster allows intensified outlet pressure & full cylinder consumption
- In-situ cylinder re-fill port: Integrated re-fill port allows cylinder refill without removing cylinders
- Any color paint finish: RAL code is required to allow for different paint color
- Different size towing eye
- Weather-proof cover
- Powder fire extinguisher: 3 kg powder fire extinguisher and retaining bracket

AVAILABLE ACCESSORIES

Country compatible cylinder connectors

- UK Oxygen bottle connection
- German Oxygen bottle connection
- French Oxygen bottle connection
- USA/North America/Singapore bottle connection

BENEFITS

- Modular charging system
- Self-venting regulator
- Easy-load system
- Pressure relief and isolation valves
- Heat soak
- Safety and reliability
- Unrivalled quality
- Ergonomic design
- On-site service

TECHNICAL SPECIFICATION

OXYGEN SERVICE CART

Model-No.	NBOT-2 (two bottle cart) NBOT-4 (four bottle cart)
Lenght	2,700 mm 106.3 inch
Width	1,324 mm 52.1 inch
Height	1,441 mm 56.7 inch

6.3 AIRCRAFT WHEEL AND BRAKE CHANGE TRAILER

HYDRO PARTNER PRODUCT NEWBOW AEROSPACE GROUND SUPPORT EQUIPMENT

DESCRIPTION

The aircraft wheel and brake change service support trailers have been primarily designed to aid with fast, safe and effective wheel and brake change operations on the ramp, around the airport and even within the hangar.

Designed to accommodate any two aircraft wheels (up to A380 size), one wheel and brake change dolly, one axle-jack and a multitude of aircraft tooling, the wheel and brake change trailer is the ultimate aviation mobile service support center. The trailer is accessed via the spring balanced rear ramp door that offers a minimal gradient, which allows one person to easily load and off-load large aircraft wheels and the axle-jack. Inside the trailer is a centrally mounted (removable) workbench that allows operators to undertake any additional tasks.

The front mounted towing arm features an integrated double acting parking brake. The operator can manually engage the parking brake when pushing the towing arm to the vertical position or automatic engagement when towing arm is free hanging in the horizontal position.

The complete trailer consists of a primer and 2-pack paint finish, offering skydrol resilience and added longevity. For optimum efficiency during aircraft turnaround and maintenance cycles, the aircraft wheel and brake change trailer can be offered with a fully certified nitrogen charging system which is externally located at the front of the trailer.

The nitrogen system consists of a modular weatherproof charging cabinet featuring a calibrated low and high pressure configuration, two auto-retractable hose reels, a cylinder connection manifold and two gas cylinder stowage points and restraints. In addition, the aircraft wheel and brake change trailers can be fully customized ahead of manufacture to meet any individual and operator requirements.

In association with our strategic partner network, global re-calibration, service, repair and overhaul of the nitrogen cabinet is offered along with a charging system exchange scheme.

PRODUCT FEATURES

- Fully enclosed or open top
- Spring assisted low gradient rear ramp door
- Towing arm with integrated double acting parking brake
- Front axle and enclosed turntable assembly
- 2-pack paint finish, skydrol resilient
- Operational payload 1000 kg as standard
- Storage for 2 x wheels, 1 x axle-jacks
- Brake pack, 1 x wheel dolly & tooling
- Front mounted tool box or nitrogen
- Charging system
- Internal workbench (removable)
- Ground Support Equipment BS EN and H&S compliant
- Serviceable
- Fully traceable
- Reliable, robust and safe
- NBWBCT-70280 & 70275 feature (extra side ramp door)
- NBWBCT-70280 & 70275 can store additional contents
- Optional modular nitrogen system
- Side and rear access ramps
- Adjustable ride height rear suspension
- Overrun braking system with braked hubs

OPTIONS

- Standard or nitrogen configuration
- Any colour paint finish
- Customer corporate logos possible
- Fully customized solutions available

AVAILABLE ACCESSORIES

- Country compatible gas cylinder connections (N2 option)
- Mobile wheel mover

BENEFITS

- Ground Support Equipment BSEN compliant
- Ergonomic design
- Easy loading and off-loading

TECHNICAL SPECIFICATION

AIRCRAFT WHEEL AND BRAKE CHANGE TRAILER

Trailer	Length	Width	Heigth
NBWBCT-70280	4,666 mm 183.7 inch	2,400 mm 94.5 inch	2,102 mm 82.8 inch
NBWBCT-70275	4,666 mm 183.7 inch	2,400 mm 94.5 inch	2,102 mm 82.8 inch
NBWBCT	3,486 mm 137.2 inch	2,336 mm 92 inch	1,997 mm 78.6 inch
NBWBCT-N2	3,486 mm 137.2 inch	2,336 mm 92 inch	1,997 mm 78.6 inch
NBWBCT-70281 (Open top)	3,486 mm 137.2 inch	2,336 mm 92 inch	1,384 mm 54.5 inch
NBWBCT-70282 (Open top)	3,486 mm 137.2 inch	2,336 mm 92 inch	1,384 mm 54.5 inch

Trailer	Rear ramp door	Side ramp door	Override brake system for assisted breaking during towing	Adjustable ride (height rear suspens)	Dual use nitrogen system	Hose reels and bottle holder
NBWBCT-70280	x	x	x	x		
NBWBCT-70275	x	x	x	x	x	x
NBWBCT	x		optional	optional		
NBWBCT-N2	x		optional	optional	x	x
NBWBCT-70281	x		x	x		
NBWBCT-70282	x		x	x	x	x

6.4 FLUID DISPENSER

DESCRIPTION

The fluid dispenser allows serving aircraft hydraulic reservoirs, engines, APU, IDG, CSD, landing gear struts, thrust reversers, actuators and many more.

PRODUCT FEATURES

- Translucent specially formulated polyethylene reservoir, compatible, for all fluids
- Easy fluid level control
- Screwed filler cap, big size
- Colored fluid placard
- Galvanized steel handle
- Hand pump, stainless steel shaft and laminated aluminum handle
- Double sealed with relief valve

OPTIONS

Dispenser sizes

- 2 US gallon (7.6 litres)

Fluid Designation & Placard

- A - EXXON 2380
- B - ENGINE OIL
- C - MOBIL 254
- D - 5606
- E - MOBIL JET II
- F - 2197
- G - SKYDROL
- H - HYDRAULIC OIL
- K - HYJET IV
- L - CSD/IDG

BENEFITS

- Ergonomic design
- On-site service

TECHNICAL SPECIFICATION

FLUID DISPENSER

Model-No.	BOB02	BOB05	BOB20
Reservoir capacity	7.6 litres (2 US gallon)	19 litres (5 US gallon)	76 litres (20 US gallon)
Pump outlet pressure	175 psi 79 – 83 kPA	175 psi 79 – 83 kPA	175 psi 79 – 83 kPA
Volume per stroke	7.2 cubic inch / 120 cc	7.2 cubic inch / 120 cc	7.2 cubic inch / 120 cc
Hose lenght	2,200 mm 7 inch	4,500 mm 15 inch	2,200 mm 7 inch
Net weight (empty)	14 lbs / 6.4 kg	48 lbs / 21.8 kg	74 lbs / 33.6 kg
Filter rating	10 Micron (nominal)	10 Micron (nominal)	10 Micron (nominal)
Total height	428 mm 16.8 inch	1,028 mm 40.5 inch	1,028 mm 40.5 inch
Total length	314 mm 12.4 inch	603 mm 23.8 inch	603 mm 23.8 inch
Width	267 mm 10.5 inch	464 mm 18.3 inch	464 mm 18.3 inch

6.5 AIRCRAFT TYRE PRESSURE CHECKING GAUGES

HYDRO PARTNER PRODUCT NEWBOW AEROSPACE GROUND SUPPORT EQUIPMENT

DESCRIPTION

The aircraft tyre pressure checking gauges are offered in a wide range of configurations allowing coverage of all make and model aircraft.

Each tyre pressure gauge is calibrated to an accuracy of ±1 % allowing optimum aircraft tyre pressure settings to be achieved.

The 100 mm pressure gauge dial face allows instant visibility of the tyre pressure making the operators task very efficient in any environment.

The wide range of push-on tyre valve adapters are designed to interface with 8 V and 12 V tyre valves and cover any tyre aircraft in service.

PRODUCT FEATURES

- Calibrated accuracy ±1 %
- EN837-1 compliant
- Single scale dial
- 260 psi, 300 psi, 400 psi, 450 psi, 500 psi ranges available
- Shatter proof lens
- 100 mm dial for easy visibility
- Protective rubber cover
- 450 mm air hose assembly
- Wide range of adapter to interface with the tyre valve
- Released with calibration test certificate
- "night glow" dial face which automatically illuminates the dial during dark environments
- Dual scale dial, psi & bar

BENEFITS

- Accurate tyre pressure setting
- Easy to use
- Ergonomic design
- Instant pressure visibility
- Suitable for any aircraft

TECHNICAL SPECIFICATION

AIRCRAFT TYRE PRESSURE CHECKING GAUGES

Model-No.	260 PSI	300 PSI	400 PSI	450 PSI	500 PSI
Pressure gauge with INLINE adapter for 8 V size tyre valves	NTG2604-S	NTG3004-S	NTG4004-S	NTG4504-S	NTG5004-S
Pressure gauge with INLINE adapter for 12 V size tyre valves	NTG2604-L	NTG3004-L	NTG4004-L	NTG4504-L	NTG5004-L
Pressure gauge with ANGLED adapter for 8 V size tyre valves	NTG2604-HH1	NTG3004-HH1	NTG4004-HH1	NTG4504-HH1	NTG5004-HH1
Pressure gauge with ANGLED adapter for 12 V size tyre valves	NTG2604-HH1L	NTG3004-HH1L	NTG4004-HH1L	NTG4504-HH1L	NTG5004-HH1L
Pressure gauge with 90 degree universal adapter for 8 V and 12 V size tyre valves	NTG2604-D	NTG3004-D	NTG4004-D	NTG4504-D	NTG5004-D
Pressure gauge with 2 x inline adapters for 8 V and 12 V size tyre valves	NB2604-D	NB3004-D	NB4004-D	NB4504-D	NB5004-D

6.6 AIRCRAFT TYRE INFLATION

HYDRO PARTNER PRODUCT NEWBOW AEROSPACE GROUND SUPPORT EQUIPMENT

DESCRIPTION

The aircraft tyre inflation tools and kits are offered in a wide range of configurations allowing coverage of all make and model aircraft.

The 350 psi inflation tool allows accurate inflation of the aircraft tyre as well as vent capability. An optional excess pressure relief valve can be integrated allowing automatic venting of inflation gas, factory pre-set to vent between 0 psi and 350 psi. The tyre inflation kits can be provided with a range of inflation hoses each at a two-metre length to allow a safe working distance for the operator. The inflation hoses all feature safe screw-on thread type inflation adapters offering added safety during the tyre inflation procedure.

PRODUCT FEATURES

- Calibrated accuracy ±1.5 %
- EN837-1 compliant
- Single scale dial
- 350 psi working pressure
- Shatter proof lens
- Inflation & deflation capability
- Pre-use accuracy check
- 2-meter length inflation hoses
- Compatible inflation tool and hoses
- Released with calibration test certificate

OPTIONS

- "Night glow" dial face which automatically illuminates the dial during dark environments
- Excess pressure relief valve fitted to the inflation tool body

BENEFITS

- Accurate tyre inflation
- Dead-man level for operator safety
- Easy to use
- Compatible inflation tool and hoses
- 2-meter hose allows safe working distance
- Released with calibration test certificate

TECHNICAL SPECIFICATION

AIRCRAFT TYRE INFLATION

Model-No.	Inflation Tool 0-350 psi	Inflation Tool 0-350 psi with excess pressure relief valve	Inflation Hose with fill adapter for 8 V size tyre valve	Inflation Hose with fill apdapter for 12 V size tyre valve	Inflation hose with long reach fill adapter for 8 V size tyre valve	Inflation hose with long reach fill adapter for 12 V size tyre valve
MK7ATISGBC-GH	x					
MK7ATISGBC-EPRV		x				
MK7ATIS-001	x		x			
MK7ATIS-002	x		x	x		
MK7ATIS-003	x			x		
MK7ATIS-001EL	x				x	
MK7ATIS-002EL	x				x	x
MK7ATIS-003EL	x					x

6.7 WATER SEPARATOR AND HYDRAULIC PURIFIER

HYDRO PARTNER PRODUCT TESTFUCHS

DESCRIPTION

This equipment is mainly used to separate water from hydraulic fluid (phosphate ester based medium of type IV and V), to remove particles and air.
The unit is capable to significantly reduce water content in phosphate ester based hydraulic media (Skydrol, Hyjet).

It can be used with with all HGPUs to purify A/C or HGPU hydraulic fluid (works directly on the A/C connected in the return line) and can be applied during the course of routine maintenance activities.

In general Airliners can choose between oil change or purification (ATA Chapter 12). Purification of the hydraulic fluid increases the life time and unscheduled ground times and disposal of tons of oil can be avoided.

Also oil from drum can be refreshed - did you know that often new oil has too much water inside?

The unit was developed in cooperation with and tested at Austrian and Lufthansa.

PRODUCT FEATURES

- The system is developed to separate water from phosphate ester based medium of type IV and V
- The equipment drains the A/C system during regular maintenance tasks, when the A/C is supplied via a hydraulic supply
- The hydraulic medium in the hydraulic supply can be drained as well
- The system reaches water concentrations below 1000ppm
- Compact and robust design - double axle chassis with steering axle and tow-bar
- Mechanic safety brake for usage without drawing vehicle
- Integrated humidity sensor
- Filter to separate particles from oil
- Oil-oil heat exchanger for energy recovery
- Developed for transport by forklift truck

OPTIONS

Couplings for the following A/C:

- A350
- A380
- B787

TECHNICAL SPECIFICATION

WATER SEPARATOR AND HYDRAULIC PURIFIER

Model-No.	WSS4
Electrical supply (requirement)	Mains connection: 3/PE AC 50 Hz 400 V Performance: approx. 12 kVA Nominal current: max. 17 A Back-up fuse: 20 Agl
Flow	Inlet: max. 225 l/ min (limited) (52,4 gal/ min)
Medium	All phosphat ester based media
Operating conditions	Ambient temperature: 5 to 45 °C (41 to 113 °F) Storage temperature: -25 to +50 °C (-13 to 122 °F) Rel. air humidity: 50 to 95 % (non-condensing)
Filter	Inlet: 25 mic. Outlet: 3 mic. System: 10 mic.
Dimensions	Weight: approx. 850 kg/ 1.874 lbs 3,169 mm (2,247 mm folded tow-bar) x 1,169 mm x 1,544 mm 124.8 inch (88.5 inch folded tow-bar) x 46 inch x 60.8 inch

6.8 OIL FILLING UNIT

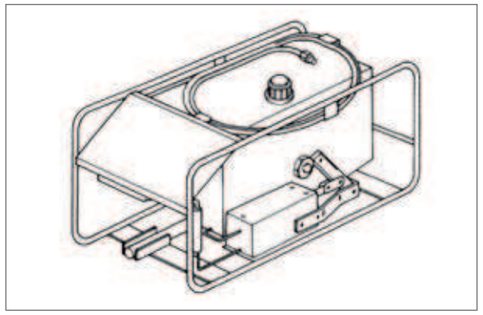

DESCRIPTION

Filling unit to replenish the APU, or IDG/CSD.
The required fluid type is turbine oil.

TECHNICAL SPECIFICATION

OIL FILLING UNIT

Model-No.	AIT120001
Aircraft applications	Universal
Applications	all

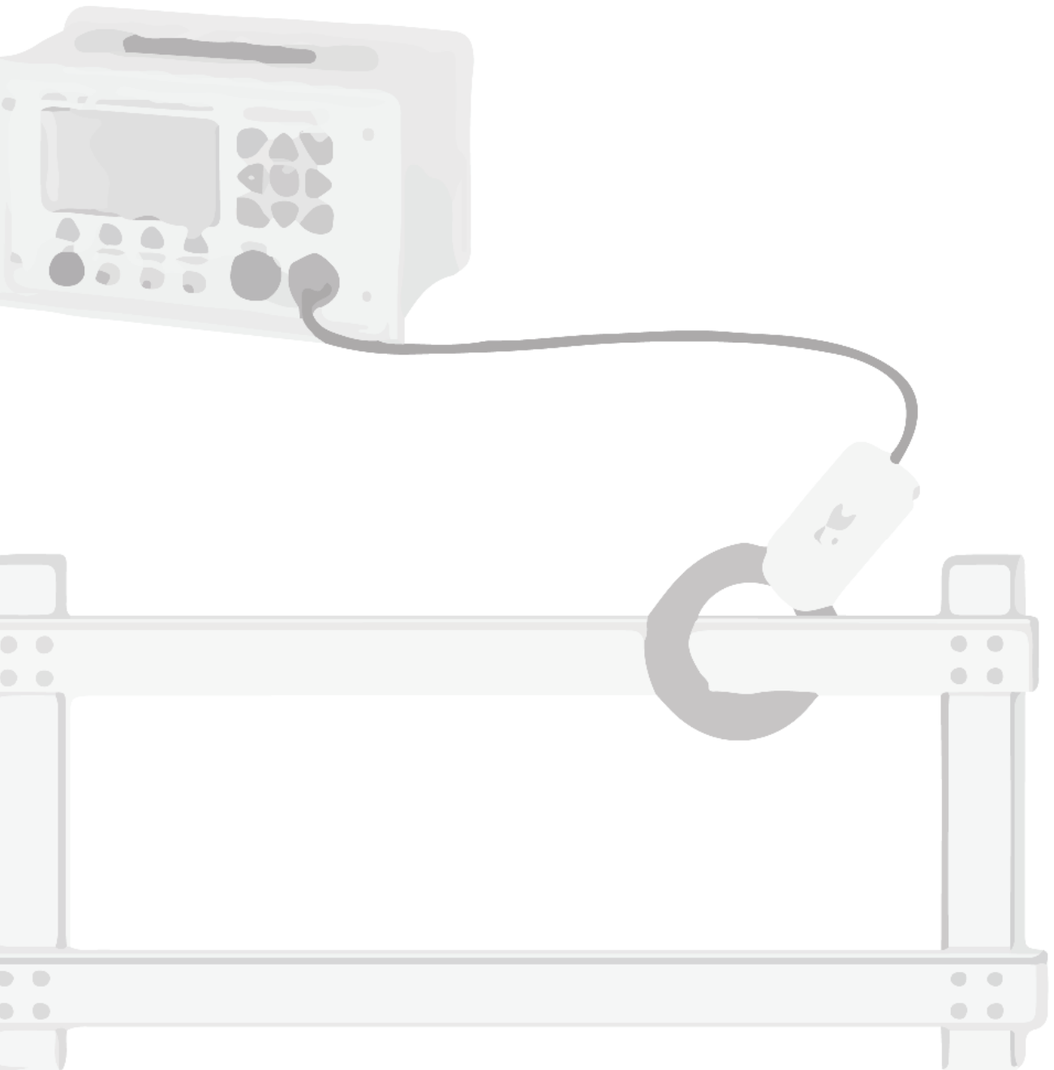

7

ELECTRICAL POWER
ATA CHAPTER 24

7 LOOP RESISTANCE TESTER AIRLINER SET

HYDRO PARTNER PRODUCT TESTFUCHS

DESCRIPTION

This tool is used to perform Loop Impedance Tests on aircraft wiring. The package includes all equipment required to perform a measurement successfully.

PRODUCT FEATURES

- Full equipment included to perform a measurement
- Very large, easy to read display
- Battery powered, rechargeable in situ or removed
- Galvanically isolated interface for remote control or data exchange
- Automatic residual current compensation
- Range is switched automatically
- Search mode for rapic location of faulty connections
- Including self test unit for function control of the test equipment and the measuring clamps

OPTIONS

Optional measurement clamp set

- Supply clamp
- Current measurement clamp

STANDARD ACCESSORIES

- Self test UUT
- Measurement cable set with two banana plugs and test prods for search mode
- Power supply unit incl. power cable for charging
- Battery "AXCOM"
- Shoulder strap

BENEFITS

- Tool / Equipment bulletin for A320 Family
- Tool / Equipment bulletin for A330 / A340
- Tool / Equipment bulletin for A380
- All equipment included to perform a measurement successfully

TECHNICAL SPECIFICATION

LOOP RESISTANCE TESTER AIRLINER SET

Model-No.	IM2FSAL1 / IM2FSA2
Power operation	1 / N / PE AC 50/ 60 Hz 100-240 V
Battery	14.4 V Li-Ion
Charging time	6 hours
Measurement range up to	400 mΩ
Data Storage	90 measured valves
Max. resolution	0.1 mΩ
Output voltage	max. 70 V
Output current	max. 1 A
Accuracy	depends on clamps (e.g. IMZ7 ± 5 % o.m.v., but not less than ± 2 mΩ)
Dimensions	approx. 250 x 280 x 160 mm 9.8 x 11 x 6.3 inch
Weight of equipment	approx. 5 kg approx. 11 lbs
Applications	**A318** **A319ceo / A319neo** **A320ceo / A320 neo** **A321ceo / A321neo** A330ceo / A330neo A340 all A380

TECHNICAL SPECIFICATION

LOOP RESISTANCE TESTER AIRLINER SET

Model-No.	IM2FSAL1	IM2FSAL2
Set	Set with: ▪ Supply clamp IMZ6 ▪ Current measurement clamp SMZ6	Set combined with: Impedance measurement clamp IMZ7
Measuring	▪ For measurement both one supply and one current measuring clamps are required ▪ Apt for use on cables and metal rails of up to approx. 20 mm diameter ▪ Spring loaded to close (operating) position ▪ Modified split standard clamps fluke i200 ▪ Integrated measure button on supply clamps ▪ Both clamps have arrows showing the current direction	▪ Symmetric design ▪ Apt for use on cables in a confined area of up to approx. 26 mm diameter ▪ Spring loaded to closed (operating) position ▪ Combined supply and current measurement clamps ▪ Symmetric windings for high repeatability ▪ Measure button
Frequency	For test equipment with 1 kHz	For test equipment with 1 kHz
Resistance range	400 mΩ	400 mΩ
UUT diameter	max. 20 mm	max. 26 mm
Accuracy	5 % o.m.v. but not less than 2 mΩ	± 5 % o.m.v. but not less than 2 mΩ
Repeatability of UUT variations position in clamp opening	± 3 % of full scale ± 1 mΩ	± 2 % of full scale ± 0.5 mΩ
Jaws opening	approx. 21 mm	approx. 31 mm
Weight	approx. 700 g	approx. 500 g
Cable length	3 m	3 m
Overall dimensions (without cable)	50 mm x 30 mm x 135 mm 2 inch x 1.2 inch x 5.3 inch	58 mm x 31 mm x 120 mm 2.3 inch x 1.2 inch x 4.7 inch

8

EQUIPMENT / FURNISHING

ATA CHAPTER 25

8 CABIN INTERIOR ACCESS STAND

HYDRO PARTNER PRODUCT LIFTSAFE FALL PROTECTION INC.

DESCRIPTION

This Cabin Interior Access Stand is ideal for use in the economy aisle and is designed to fit over most economy and some business class seats. It has been designed as a single worker unit with a capacity of 149.7 kg (330 lbs). It is collapsible for easy carrying and storage. The ladder is of durable construction made primarily of structural aluminum with stainless steel hardware and a self-weight of only 11.3 kg (25 lbs).

Anti-slip ladder rungs ensure maintenance staff and employee safety during operation. The Cabin Interior Access Stand is ideal for ramp use and can easily be carried up ramp stairs. The ladder is designed and tested in accordance with ANSI-ASC A14.7 and BS EN 131.7.

PRODUCT FEATURES

- Padding material
- One person movement
- Material type: Polished aluminum
- Collapsible
- Anti-slip ladder rungs
- High grade materials
- Rigorous inspection and testing

BENEFITS

- Avoiding damages at passenger seats during maintenance
- Safety and reliability
- Ergonomic design
- Unrivalled quality and durability

TECHNICAL SPECIFICATION
CABIN INTERIOR ACCESS STAND

Model-No.	DF071553-01
Certifications	ANSI-ASC A14.7, BS EN 131.7
Dimensions (shipping)	419 mm x 1,209 mm x 918 mm x 55 kg 16.5 inch x 47.6 inch x 36.125 inch x 25 lbs
Height	lowered: 1,209 mm 47.6 inch
Foot Print	419 mm x 918 mm 16.5 inch x 36.1 inch

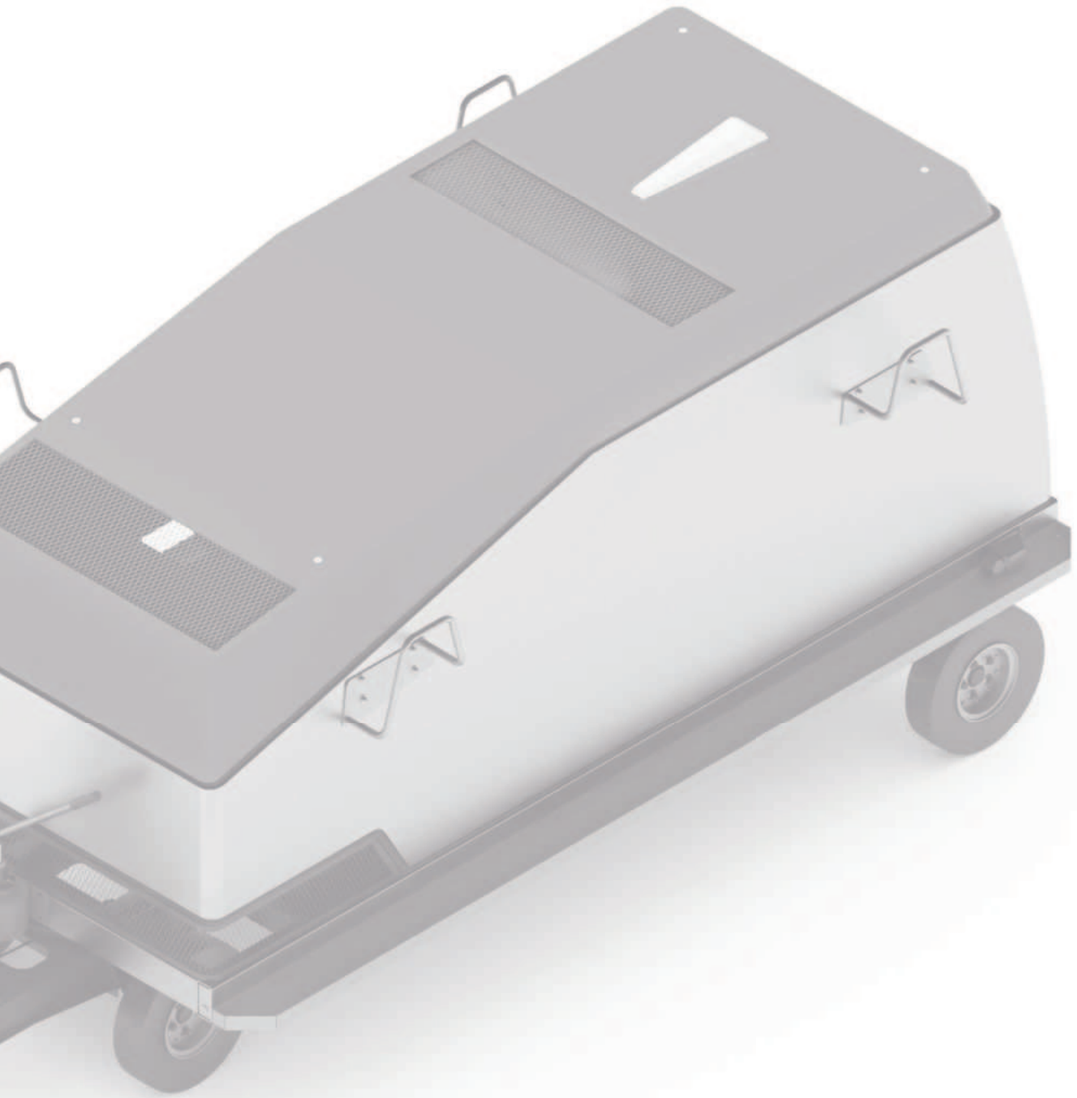

9

HYDRAULIC POWER
ATA CHAPTER 29

9.1 HYDRAULIC POWER

HYDRO PARTNER PRODUCT TESTFUCHS

DESCRIPTION

Hydraulic Ground Power Units are mainly used inside the hangar. A crucial factor for these operators is the noise. With a noise level of 72 dB, full load, at a distance of 1 meter makes communication hassle-free. The well-engineered design of the hydraulic cart has many advantages. One of the highlights is its clean functioning. The hydraulic installations and the cooling are separated. Therefore it is impossible that Skydrol contaminates the environment. Neither the aircraft nor the operator will suffer from oil contamination, saving a lot of time and hassle in cleaning processes.

PRODUCT FEATURES

- Electric or Diesel power
- Single system or dual circuit
- Easy pressure control using the 0 psi, 3,000 psi/ 5,000 psi push buttons as applicable
- The stainless steel hydraulic reservoir has a capacity of 240 l (63 USgal)
- Hydraulic reservoir selection (A/C or HGPU) via illuminated buttons on the control panel
- Very suitable hydraulic supply for "Ram Air Test Ground Checks" (together with the Airbus certified RAT Tester PGRAT 1, RATMK, RATMK 350, RATMK 380)
- Automatic over temperature shutoff feature at 70 °C (160 °F)
- Ramp function for soft pressure build-up
- Pressure and flow rates are infinitely variable and limitable
- Easy draining and filling of the aircraft reservoirs is carried out by "Fill"/ "Drain" push buttons
- Two large fan operated oil-air coolers ensure optimum cooling
- Easy access is provided by the hydraulically operated cover
- Free from Skydrol vapours
- Automatic over-temp protection
- Separate low pressure circuit for anti-cavitation
- Entire life cycle support and spares
- Special low pressure circuit guarantees constant cleaning and cooling of hydraulic medium
- Simple but sophisticated design
- Waterproof cover made of GRP, Skydrol resistent
- OEM quick disconnect couplings available
- Change the filter only upon indication
- Customer specific color options
- Maximum towing speed is 15mph (25 km/h)
- Dual system without a transfer gear box (to prevent the possibility of hydraulic/lubricating oil contamination)
- Phospate-Ester Hydraulic Oil ("Skydrol" or "Hyjet") or Mineral Oil based Hydraulic Oil ("MIL-H-5606", "MIL-H-83282", "MIL-H-87257")

OPTIONS

- Flow measurement with digital indicator
  - Single system 2 to 66 USgpm (10 to 250 l/ min), ±1 % of full scale
  - Dual System (independent) 1.3 to 42 gpm (5 to 160 l/ min), ±1 % of full scale
- Flushing circuit with loading system
- Filter (25 micron) in the return line
- Sampling points
- Comfortable filling neck outside of the housing
- External filling level indicator
- 180 degree swivel adapters
- PLC operation
- IoT gateway

BENEFITS

- User friendly ergonomic setup and operation
- Worldwide support locations
- Expert support
- On-hand spares
- Extended warranty
- Fleet support programs available
- Easy calibration
- World-wide universal connection (compatible with multiple voltages)
- For hangar and outdoor usage
- Certified for all Airbus aircraft

TECHNICAL SPECIFICATION

HYDRAULIC POWER

Aircraft System	Type	Engine	System	Flow (USGPM)*	Motor (KW)
3,000 psi	HGPU50-30-1	Electric or Diesel	Single	50	75 - electric/ 114 - diesel
3,000 psi	HGPU30-30-2	Electric	Dual (Independent)	2 x 30	2 x 45
5,000 psi or 3,000 psi	HGPU60-50-1	Electric or Diesel	Single	60	132 electric/ 173 - diesel

Other versions possible

*The specified values are based on the nominal flow at 50 Hz supply, the values are proportionately higher at 60 Hz.

TECHNICAL SPECIFICATION

HYDRAULIC POWER

Model-No.		HGPU
Operating conditions	Ambient temperature	–25 to +45 °C (–13 to +113 °F)
	Noise emission	Electrical power supply: max. 75 dB(A) at 1,000 mm (39.4 inch) distance Diesel power supply approx. 84 dB(A) at the operating panel (at 2200 rpm, approx. 50 USgpm. 3000psi)
Dimensions and empty weight	Assembly 1 (5000 psi - HGPU60-50-1)	3,950 mm x 1,800 mm x 1,700 mm x 2900 kg 155.5 inch x 70.9 inch x 66.9 inch x 6393 lbs
	Assembly 2 (3000 psi - HGPU50-30-1; HGPU60-30-1; HGPU25-30-2; HGPU30-30-2)	3,800 mm x 1,800 mm x 1,700 mm x 2,500 kg 149.6 inch x 70.9 inch x 66.9 inch x 5,511 lbs
	Assembly 0: (Diesel) (HGPU50-30-1; HGPU60-50-1)	4,600 mm x 1,800 mm x 2,100 mm x 3,200 kg 181.1 inch x 70.9 inch x 82.7 inch x 7,055 lbs
Measurement accuracy	Supply pressure (analog)	0 - 400 bar (0 - 5,800 psi), cl. 1 (EN 837)
	Return pressure (analog)	0 - 10 bar (0 - 145 psi), cl. 1.6 (EN 837)
	Oil temperature indicator	0-100° C (32-212° C)
	Flow measurement	Single circuit: 0.32 - 250 lpm (0.08 - 66 USgpm) ± 1 % of full scale Dual circuit 0.32 - 160 lpm (0.08 - 42 USgpm) ±1% of full scale
Filter		3 micron filling circuit, 6 micron in each low and high pressure circuit 25 micron in return
Depending on the type of the equipment, the following hydraulic oils can be used		Phospate-Ester Hydraulic Oil ("Skydrol" or "Hyjet") or Mineral Oil based Hydraulic Oil ("MIL-H-5606", "MIL-H-83282", "MIL-H-87257"
Airbus applications		A220 A300 A310 **A320/ A320neo/ ceo** A330/ 340 A350 A380
Boeing applications		B737/ B737MAX/ Classic B747 B757 B767 B777 B787
Other applications		ERJ135/ 145 E-Jets CRJ Series AN 124, AN 148, SuperJet 100 MS21

9.2 WATER SEPARATOR SYSTEM

HYDRO PARTNER PRODUCT TESTFUCHS

DESCRIPTION

This equipment is mainly used to separate water from hydraulic fluid (phosphate ester based medium of type IV and V), to remove particles and air.

The unit is capable to significantly reduce water content in phosphate ester based hydraulic media (Skydrol, Hyjet).

It can be used with with all HGPUs to purify A/C or HGPU hydraulic fluid (works directly on the A/C connected in the return line) and can be applied during the course of routine maintenance activities.
In general Airliners can choose between oil change or purification. Purification of the hydraulic fluid increases the life time and unscheduled ground times and disposal of tons of oil can be avoided.
Also oil from drum can be refreshed - did you know that often new oil has too much water inside?
The unit was developed in cooperation with and tested at Austrian and Lufthansa.

PRODUCT FEATURES

- The system is developed to separate water from phosphate ester based medium of type IV and V
- The equipment drains the A/C system during regular maintenance tasks, when the A/C is supplied via a hydraulic supply
- The hydraulic medium in the hydraulic supply can be drained as well
- The system reaches water concentrations below 1000 ppm
- Compact and robust design - double axle chassis with steering axle and tow-bar
- Mechanic safety brake for usage without drawing vehicle
- Integrated humidity sensor
- Filter to separate particles from oil
- Oil-oil heat exchanger for energy recovery
- Developed for transport by forklift truck

OPTIONS

Couplings A350, A380, B787

INCLUDED ACCESSORIES

Couplings for the following A/C:

- All Airbus types (except A350/ A380)
- Boeing B737NG (-600/ -700/ -800/ -900 series)
- B737 MAX (-7/ -8/ -9 series)
- B747, B757, B767, B777
- DC-10
- MD-11

BENEFITS

- Drains the A/C system during regular maintenance tasks, when the A/C is supplied via a hydraulic supply
- The hydraulic medium in the hydraulic supply can be drained as well
- Easy operation
- Reaches water concentrations below 1000 ppm
- Certified for all Airbus A/C in accordance with Tool/Equipment bulletin

TECHNICAL SPECIFICATION

WATER SEPARATOR SYSTEM

Model-No.	WSS4
Electrical supply (requirement)	Mains connection: 3/ PE AC 50 Hz 400 V Performance: approx. 12 kVA Nominal current: max. 17 A Back-up fuse: 20 Agl
System pressure	Drain A/ C: 3.1 to 8 bar (45 to 120 psi) Drain HGPU: 20 to 345 bar (300 to 5000 psi)
Flow	Inlet: max. 200 l/ min (limited) (52.8 gal/ min)
Medium	Skydrol and Hyjet type IV and V
Operating conditions	Ambient temperature: 5 to 45 °C (41 to 113 °F) Storage temperature: -25 to +50 °C (-13 to 122 °F) Rel. air humidity: 50 to 95 % (non-condensing)
Filter	Inlet: 25 mic. Outlet: 3 mic. System: 10 mic.
Weight	approx. 850 kg 1,874 lbs
Length	2,250mm 88.6 inch
Width	1,170 mm 46 inch
Height	1,150 mm 61 inch

9.3 SAMPLING VALVE ADAPTER

HYDRO PARTNER PRODUCT TESTFUCHS

DESCRIPTION

The adapter is developed to take oil samples of all Airbus A/C hydraulic systems (green, blue and yellow) as safely and carefully as possible.

It is developed in collaboration with Airbus.

PRODUCT FEATURES

- Safe oil sample taking for the operator directly on the A/ C manifold
- By direct coupling to the needle of the manifold valve, proper taking of the oil sample is ensured without any pollution from the environment
- Appropriate for the valve 71190400010NCOA (A300, A310, A320, A330, A340) and D2428000C (A380)
- Regulable flow
- With detailed installation instructions and identification on the device
- Stable transport case with accessories included in the scope of delivery

BENEFITS

- Airbus certified
- User-friendly ergonomic setup and operation
- For hangar and outdoor usage

9.4 TEST EQUIPMENT FOR RAM-AIR TURBINE

HYDRO PARTNER PRODUCT TESTFUCHS

DESCRIPTION

This test equipment is necessary to accomplish a functional test of the Ram-Air Turbine (RAT).

PRODUCT FEATURES

- Compact stainless steel construction
- Storage space for RAT-motor, cables and hoses in the test device
- Skydrol-resistant construction with sealed electrical chamber and safety glass cover plate
- RAT-motor available in two versions
- Operation with battery / mains or aircraft supply

OPTIONS

PGRAT1

- Test equipment for RAM-Air turbines, consisting of: Test equipment RAT (PGRAT1)

Also available as RAT Test Set 1 and RAT Test Set 2

AVAILABLE ACCESSORIES

- RAT motor: RATMK Version 1
- RAT motor: RATMK Version 2
- RAT safety Kit: RSIK1
- Collecting bin for RSIK1: ABRSIK1

STANDARD ACCESSORIES

- Hose l = 13 ft (4.0 m) with Aeroquip-Coupling with protective cap, (AE 95074 N)
- Hose l = 13 ft (4.0 m) with Aeroquip-Coupling with protective cap (AE 94186 P)
- Supply and test cable <PKL 730-4> for RAM-AIR pressure- and speed indicator and 28 V DC A/C supply
- Supply cable for 28 V DC A/C supply (PKL 730-2)
- Charging- and supply cable for test equipment RAT (range 90-260 V AC, 47 - 63 Hz) (PKL 730-3)

BENEFITS

The test device and RAT-motor are Airbus certified (PGRAT1, RATMK)

TECHNICAL SPECIFICATION

TEST EQUIPMENT FOR RAM-AIR TURBINE

Model-No.	PGRAT1
Dimensions and weight	920 mm x 900 mm x 1,200 mm x 245 kg 36.2 inch x 35.4 inch x 47.2 inch x 540 lbs
Hydraulic parameter	Measurement circuit with loading throttle High pressure filter with mechanic contamination indication, 6 mic Oil relief valve G 1/4 "
Measurements	Flow measurement, digital 1.3 - 40 gpm (5-150 lpm) Cl.1.0 Temperature indicator, analog 0 - 100 °C (32 - 212 °F) Cl.1.0 Pressure indicator, analog 0 - 3600 psi (0-250 bar) Cl.1.0 RAM-Air pressure indicator, digital 0 - 4000 psi (0-275 bar) Cl.1.0 RAM-Air speed indicator, digital 0 - 9999 rpm ± 2 rpm
Applications	**A318** **A319ceo/ A319neo** **A320ceo / A320neo** **A321ceo / A321neo** A330-200/ -300 A340-200/ -300/ -500/ -600

9.5 RAT SAFETY INTERFACE KIT

HYDRO PARTNER PRODUCT TESTFUCHS

DESCRIPTION

Developed to protect aircraft components from damage during RAT ground test. This damage could occur when the gasket (drive shaft seal) of the RAT ground check motor fails.

The RAT Safety Interface Kit can be used in conjunction with all Airbus approved RAT Ground Check Motors.

PRODUCT FEATURES

- Airbus approved, Certificate-number: D29057
- Intermediate flange suitable for every RAT Ground Check Motor product
- Comes with detailed instructions
- Scope of delivery includes rugged transport case

AVAILABLE ACCESSORIES

Collecting bin for RSIK1: ABRSIK1

- Serves as collecting bin for possible leakage of the RAT Safety interface kit

BENEFITS

The RAT Safety Interface Kit can be used in conjunction with all Airbus approved RAT Ground Check Motors (Certificate-Number: D 29057).

TECHNICAL SPECIFICATION

RAT SAFETY INTERFACE KIT

Model-No.	RSIK1
Medium	Skydrol 500-B4, Skydrol 5 and Skydrol LD-4 HYJET IV-4A and HYJET V
Dimensions (Transport case)	450 mm x 280 mm x 120 mm x 3 kg 17.7 inch x 11 inch x 4.7 inch x 6.6 lbs
Operation conditions	Ambient temperature -20 to +50 °C -4 to 122 °F
Applications	**A318** **A319ceo/ A319neo** **A320ceo / A320neo** **A321ceo / A321neo** A330-200/ -300 A340-200/ -300/ -500/ -600

9.6 TEST EQUIPMENT FOR RAM-AIR TURBINE

HYDRO PARTNER PRODUCT TESTFUCHS

DESCRIPTION

This ground check motor, driven by a hydraulic ground power unit is neccessary to accomplish a functional test of the Ram-Air Turbine (RAT).

PRODUCT FEATURES

- Aluminum light-weight construction
- Storage in the drawer of the test equipment RAT PGRAT1
- Equipment is available in two versions

OPTIONS

RATMK Version 1

- Supply and return hoses for the RAT-Motor are part of the delivery
- RAT-Motor is equipped with leak-free industrial couplings
- Appropriate to the RAT-Motor one end of the hose is equipped with a leak-free industrial couplings, the other end is equipped with standard Aeroquipcouplings (AE 96997 M, AE 96996 P)
- Supply hose with integrated flow regulator
- Equivalent to RAT-Motor-Kit AGE 10600 A

RATMK Version 2

- No hoses for RAT-Motor
- RAT-Motor is equipped with standard Aeroquipcouplings (AE 96997 M, AE 96996 P)

STANDARD ACCESSORIES

RATMK Version 1

- Supply hose with integrated flow regulator
- Return hose
- Leak-free industrial coupling for connecting the RAT-Motor
- Inlet coupling with protective cap, Aeroquip (AE 96997 M)
- Outlet coupling with protective cap, Aeroquip (AE 96996 P)
- Transport case

RATMK Version 2

- Rigid supply and return connections
- Inlet coupling with protective cap, Aeroquip (AE 96997 M)
- Outlet coupling with protective cap, Aeroquip (AE 96996 P)
- Transport case

BENEFITS

Test device and RAT-motor are Airbus certified: PGRAT1 (Certificate-Number D29065, D29066)

AVAILABLE ACCESSORIES

RAT Safety interface kit: RSIK1

- Intermediate flange suitable for every RAT ground check motor product
- Scope of delivery includes rugged transport case

TECHNICAL SPECIFICATION

TEST EQUIPMENT FOR RAM-AIR TURBINE

Model-No. - Motor		RATMK
Medium		Skydrol
Rated pressure		210 bar (3,000 psi)
Speed		6000 rpm
Max. speed		6500 rpm at min. 267 lb/inch (30 Nm)
Torque		≥ 46 Nm at 166 bar Diff.
Inlet temperature		-20 to + 75 °C -4 to +165 °F
Sense of rotation		CW
Min. load		≥ 15 Nm at 5,000 rpm
Test pressure - static		Inlet 4,500 psi (310.3 bar) Outlet and Housing 250 psi (17.3 bar)
Hausing connections	Inlet and Outlet	MS 33649-12
	RAT-Motor-inlet	MS 33656-16
	RAT-Motor-outlet	MS 33656-20
Minimum performance data of the ground power unit	Version 1	Pressure: minimum 3,000 psi (210 bar) with pressure regulation Flow: minimum 40 gpm (150 lpm)
	Version 2	Pressure: minimum 3,000 psi (210 bar) with pressure regulation Flow: Minimum 40 gpm (150 lpm) with pressure regulation Connections: Supply hoses minimum 20 ft (6 m)

Dimensions and weight	RATMK Version 1	RATMK Version 2
Width	1,200 mm 47.2 inch	700 mm 27.6 inch
Depth	800 mm 31.5 inch	450 mm 17.7 inch
Height	440 mm 17.3 inch	200 mm 7.9 inch
Weight	approx. 39 kg 86 lbs	approx. 12 kg 26.5 lbs
Applications	**A318** **A319ceo/ A319neo** **A320ceo/ A320neo** **A321ceo/ A321neo** **A321** A330-200/ -300 A340-200/ -300/ -500/ -600	**A318** **A319ceo/ A319neo** **A320ceo/ A320neo** **A321ceo/ A321neo** A330-200/ -300 A340-200/ -300/ -500/ -600

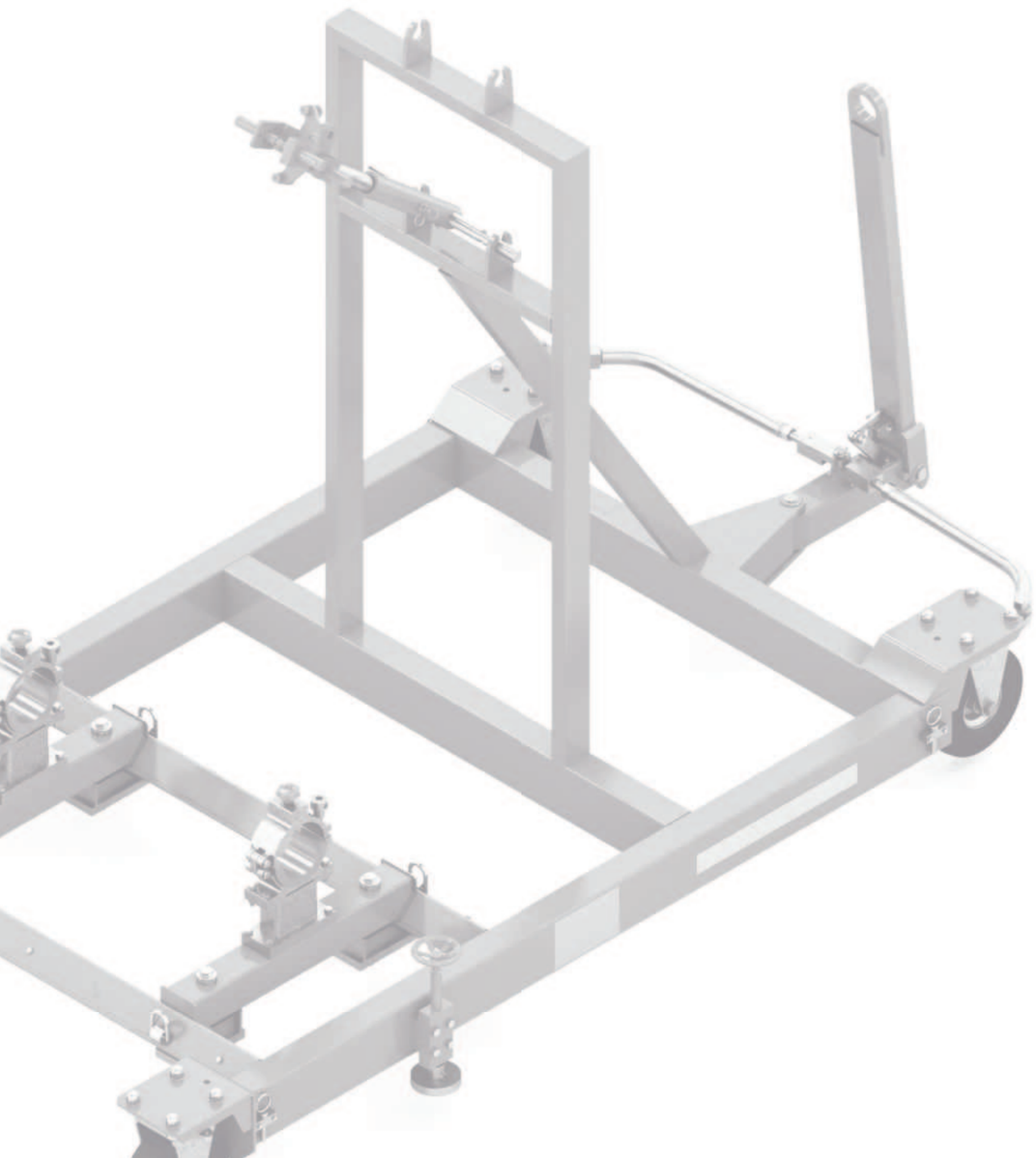

10

LANDING GEAR
ATA CHAPTER 32

10.1 WHEEL AND BRAKE CHANGE EQUIPMENT (UNIVERSAL)

DESCRIPTION

Hydraulic wheel trolley for removal of wheels and brake drums on aircraft.

PRODUCT FEATURES

- Flexible and ergonomic wheel trolley for the easy removal of wheels and brake drums
- High lifting height (710 mm) makes it ideal for lifting e.g. wheels and brake drums off a transport wagon
- Adjustable lifting arms for wheel sizes ø 270 – 1300 mm
- Lifting arms with roller bearings for easy rotation of wheel into correct position
- Pedal operated pump leaving both hands free for working
- Hand operated dead man's release for optimum safety whilst lowering
- Two swivel castors and two 360° revolving castors
- Skydrol-resistant paint (standard color: yellow RAL 1028)

AVAILABLE ACCESSORIES

Crane boom (WTK)

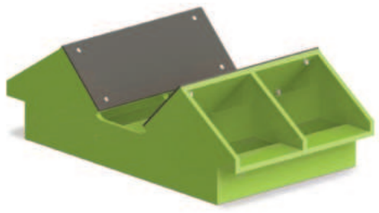

Bracket support assembly (SG62-001)

BENEFITS

- User friendly ergonomic setup and operation
- Universal application
- On-site service

TECHNICAL SPECIFICATION

WHEEL AND BRAKE CHANGE EQUIPMENT (UNIVERSAL)

Model-No.	WTA500AP
Nominal load	350 kg
Max. height	1,897 mm 74.7 inch
Min. height	1,180 mm 46.5 inch
Wheel diameter	270 – 1,420 mm 10.6 - 55.9 inch
Applications	Most of all narrow- and wide-body aircrafts, except B737

10.2 WHEEL AND BRAKE CHANGE EQUIPMENT

DESCRIPTION

Hydraulic wheel trolley for removal of wheels and brake drums on aircraft.

PRODUCT FEATURES

- Flexible and ergonomic wheel trolley for the easy removal of wheels and brake drums
- Fixed lifting arms
- Chain for easy securing of wheel during handling and transportation
- Hand operated lifting spindle
- Four swivel castors
- Skydrol-resistant paint (standard color: yellow RAL 1028)

AVAILABLE ACCESSORIES

- Tow-bar
- Crane boom

Bracket support assembly (24010-031-000)

BENEFITS

- User friendly ergonomic setup and operation
- Universal application
- On-site service

TECHNICAL SPECIFICATION

WHEEL AND BRAKE CHANGE EQUIPMENT

Model-No.	MH12-005	MH13-003
Nominal load	260 kg 270 lbs	260 kg 270 lbs
Max. height	1,350 mm 53.1 inch	1,465 mm 57.7 inch
Min. height	600 mm 23.6 inch	980 mm 38.6 inch
Wheel diameter	950 – 1,300 mm 37.4 - 51.1 inch	820 - 1,500 mm 32.3 - 59 inch
Airbus applications	A300 / A310 **A318** **A319 / A319neo** **A320 / A320neo** **A321 / A321neo** A330 A340 – 200 / – 300 / – 500 / – 600 A350 – 900 / – 1000	**A318** **A319 / A319neo** **A320 / A320neo** **A321 / A321neo** A330 A340-200 / -300 A340-500 / -600 A380
Boeing applications	B707 / B727 / B757 / B767 B777 / B787	B747-300 / -400 / -400ERF B767 B777
Other applications	DC – 10 MD – 11 L – 1011 IL – 96	MD11

10.3 LANDING GEAR TRANSPORTATION DOLLY

DESCRIPTION

The Landing Gear Dolly has been specially designed for transportation and storage of A320 Family incl. neo nose and main landing gears.

PRODUCT FEATURES

- Rigid steel frame
- Tow-bar for easy towing and moving
- Two swivel and two fixed castors
- Four landing gear clamps
- Skydrol-resistant paint

AVAILABLE ACCESSORIES

- Frame for MLG transportation and storage without wheels and brakes
- Frame for NLG transportation and storage without wheels

BENEFITS

- User friendly ergonomic setup and operation
- Universal application
- On-site service

TECHNICAL SPECIFICATION

LANDING GEAR TRANSPORTATION DOLLY

Model-No.	LGD11-001
Applications	A318 A319 / A319neo A320 / A320neo A321 / A321neo **NLG Configuration** Extended Without wheels **MLG Configuration** Compressed Without wheels Without brakes

10.4 MAIN LANDING GEAR INSTALLATION TROLLEY

DESCRIPTION

HYDRO has developed a new and innovative multi-purpose Main Landing Gear Trolley, the MLGTMULTI-1.

The MLGTMULTI-1 is a one-base platform that efficiently uses changeable adapter kits, to replace the main landing gears without wheels and brakes of various narrow body aircraft.

This one-base platform makes the MLGTMULTI-1 a versatile, convenient, and cost-saving trolley choice for servicing the main landing gears on the most popular small aircraft in the world.

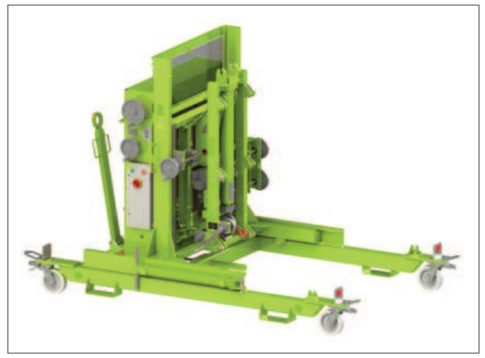

PRODUCT FEATURES

- Base unit without A/C specific landing gear adapter kit
- Longitudinal frame
- Hand wheel for vertical, transversal or longitudinal movement
- Hand wheel for pitch or yaw movement

STANDARD OPTIONS

- **MLGTMULTI-1-AC:**
  Electrically driven lifting
  Supply voltage: 3 / PE AC 380 - 240 V, 50 Hz or 3 / PC AC 440 - 480 V, 60 Hz, Cable length: 30 m
- **MLGTMULTI-1-AB:**
  Pneumatically driven lifting
  Explosion proofed according to NEC500: CI I DIV 2 GP D T3

ACCESSORIES

Adapter Kit

- for A320 Family incl. neo:
  - MLGFA320 for MLG
  - NLGFA320 for NLG
- for B737NG-600 to 900:
  - MLGFB737NG for MLG
  - NLGFB737NG-MAX for NLG
- for B737 MAX-7/-8/-9:
  - MLGFB737NG-MAX* for MLG
  - NLGFB737NG-MAX* for NLG
- for Embraer E1 (E170/175, E190/195):
  - MLGFE1 for MLG
- for Embraer E2 (E190/195):
  - MLGFE2 for MLG
  - NLGFE2 for NLG

*Validation ongoing

Scissors pallet truck

For transportation, storage and installation of adapter kits. The MLGC01 also serves as strut compression tool for B737-600 to -900.

BENEFITS

- User friendly ergonomic setup and operation
- Universal application
- Low total cost of ownership
- Outstanding accuracy
- Operational safety
- CRAS certified by LHT

TECHNICAL SPECIFICATION

MAIN LANDING GEAR INSTALLATION TROLLEY

Model-No.	MLGTMULTI-1
Capacity	1000 kg 10 kN
Weight	950 kg 2,094 lbs
Width	1,882 mm 74.1 inch
Length	2,893 mm 113.9 inch
Min. height	1,793 mm 70.6 inch
Longitudinal movement	± 175 mm ± 6.9 inch
Transverse movement	± 125 mm ± 4.9 inch
Yaw (rotation around)	± 4 °
Pitch (rotation around)	+ 7 ° (- 3 ° / + 4 °)
Total lift	800 mm 31.5 inch
Towing speed with MLG	3 km/h 1.9 mph
Towing speed without MLG	6 km/H 3.73 mph
Admissible operating temperature	0 °C to + 40 °C 32 °F to + 104 °F

The MLGTMULTI-1 is an one-base platform. It can be used in conjunction with additionally available adapter kits that are specifically tailored to each type of aircraft.

Manufacturer	Aircraft	Base platform	Adapter kit MLG	Adapter kit NLG
Airbus	A318, A319, A320, A321, A319neo, A320neo, A321neo	MLGTMULTI-1	MLGFA320	NLGFA320
Boeing	B737-600 to -900	MLGTMULTI-1	MLGFB737NG	
Embraer	170/175, 190/195	MLGTMULTI-1	MLGFE1	

10.5 MLG COMPRESSION TOOL

DESCRIPTION

The special axle-jack has been designed for strut compression of the A320 family incl. neo MLG.

PRODUCT FEATURES

- RT axle-jack design with special tilted lift cylinder (6.5°) with friction lining on the cylinder base
- Manual hand pump (operated by the tow-bar)
- Max. load of 80 kN (8.8 short tons)
- Tow-bar for operating the axle-jack
- Stainless steel cover: all other parts are painted to be Skydrol-resistant

BENEFITS

- High quality made in Germany
- Long life-cycle
- Robust and proven design
- Easy maneuvering due to optimized undercarriage
- Best handling and extreme repair-friendly due to modular design and available spare parts
- At least 10 year spare part availability
- On-site service

TECHNICAL SPECIFICATION

MLG COMPRESSION TOOL

Model-No.	SG196
Capacity	8t 8.8 tons
Applications	A318 A319 / A319neo A320 / A320neo A321 / A321neo

10.6 LANDING GEAR ACCESS STAND

HYDRO PARTNER PRODUCT LIFTSAFE FALL PROTECTION INC.

DESCRIPTION

This Landing Gear and Fuselage Access Stand was primary designed to handle all wide-body landing gear and nose gear applications. The access stand provides safe access to all maintenance locations of the main and nose landing gear.

For several aircraft types the stand in addition can be used to get access to several other maintenance access locations at the aircraft fuselage.

The base frame is designed to adjust to most wheel assembly configurations on main and nose landing gear. The hydraulic height adjustment, one hand lateral operation and full swivel and lock casters allow single technician placement and use.

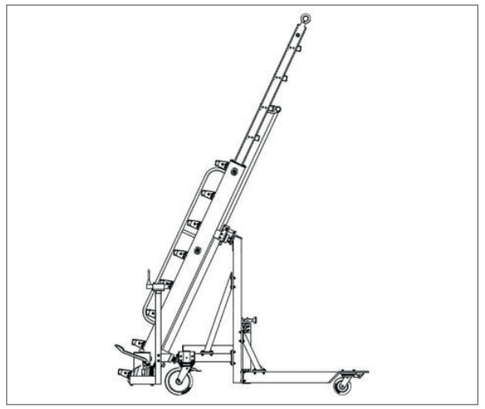

PRODUCT FEATURES

- Anti slip, anti-fatigue ladder rungs
- Corrosion-resistant powder coat finish for longevity
- For increased safety and ease of mobility, the stand comes equipped with four corner-levelling jacks
- Designed and tested in accordance with ANSI-ASC A14.7 and BS EN 131.7
- Paddling material equipped
- Fall restraint anchor points on the upper ladder
- Controls: Hydraulic foot pump
- Ergonomic design
- High-grade materials
- One person movement
- Powder coated finish

AVAILABLE ACCESSORIES

- Air-powered pump
- Utilities package
- Side mount tow-bar
- Lift truck fork pockets

APPLICATION POSSIBILITIES ON AIRBUS A320 (A319 / A321 CEO AND NEO)

- Main gear
- Aft pressure bulkhead access panel
- Pitot probe tube inpsections/ replacements
- Static port inspections/ replacements
- Trailing edge actuator inspections/ replacements

Attention: Usage examples only, validation of usage is under responsible of the operator. Further applications are available.

BENEFITS

- Flexible usage at different aircraft types and maintenence access points
- Safety and reliability
- Ergonomic design
- Unrivalled quality and durability
- Flexibility for use on a wide range of Airbus, Boeing and Embraer aircraft
- Rigorous inspection and testing
- Small footprint and greater geometry

TECHNICAL SPECIFICATION

LANDING GEAR ACCESS STAND

Model-No.	DF071592-04
Material type	Ladder: Steel Frame: Steel
Certifications	ANSI-ASC A14.7, BS EN 131.7
Dimensions (shipping)	2,210 mm x 2,438 mm 87 inch x 96 inch
Weight	499 kg 1,100 lbs
Height	Low: 2,178 mm/ 85.75 inch Extended: 3,534 mm/ 139.125 inch
Foot Print	2,210 mm x 2,438 mm 87 inch x 96 inch
Airbus applications	A300/ A310 **A319/ A320/ A321ceo and neo** A330 A340 A350
Boeing applications	B747, B757, B767, B777 B787, B787NG and MAX
Other applications	Embraer ERJ, Bombardier CR

10.7 AIRCRAFT WHEEL CHOCKS

HYDRO PARTNER PRODUCT NEWBOW AEROSPACE GROUND SUPPORT EQUIPMENT

DESCRIPTION

The aircraft wheel chocks are manufactured from a solid rubber extrusion and feature a weather-resistant hand rope along with high visibility strips on each face of the chock.

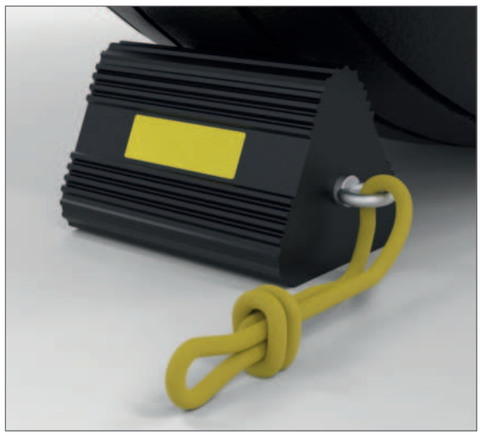

PRODUCT FEATURES

- Solid rubber
- Heavy duty
- 1-metre hand rope
- High visibility strip on all three sides
- None slip design

BENEFITS

- Easy to handle
- Solid rubber extrusion
- Visible at night
- Suitable for all wheel sizes

TECHNICAL SPECIFICATION

AIRCRAFT WHEEL CHOCKS

Model-No.	NBWC-6	NBWC-9
	12 kg wheel chock	6 kg wheel chock
Variant	Suitable for medium/ large wheels	Suitable for small/ medium size wheels
Dimensions	250 mm x 220 mm x 235 mm 9.8 inch x 8.7 inch x 9.3 inch	250 mm x 170 mm x 150 mm 9.8 inch x 6.7 inch x 5.9 inch

10.8 AIRCRAFT STRUT & ACCUMULATOR SERVICE TOOL

HYDRO PARTNER PRODUCT NEWBOW AEROSPACE GROUND SUPPORT EQUIPMENT

DESCRIPTION

The aircraft strut and accumulator service tool is fully universal and can be used with any make and model aircraft.

The 800 psi and 3500 psi gauges features a pre-use accuracy check, perspex lens and protective rubber cover.

Equipped with a 2-meter length inflation hose allows the operator to undertake the desired high-pressure inflation task whilst remaining at a safe and secure working distance.

The unit consists of an inlet flow isolation valve with none return valve and an additional excess pressure valve, allowing optimum inflation pressures to be achieved.

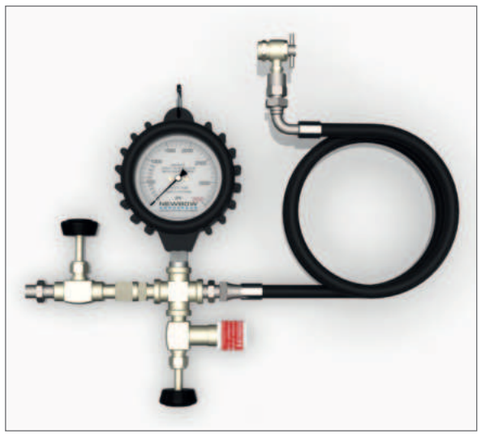

PRODUCT FEATURES

- Calibrated accuracy ± 1 %
- EN837-1 Compliant
- Single scale dial
- Up to 3500 psi working pressure
- 100 mm diameter gauge
- Shatter proof lens
- Inflation & deflation capability
- Pre-use accuracy check
- Released with calibration test certificate

OPTIONS

- "Night glow" dial face which automatically illuminates the dial during dark environments
- Customer specific inflation hose lengths can be offered

BENEFITS

- Accurate strut inflation
- Easy operator visibility when in use
- Accurately adjustable pressures
- Safe working distance

TECHNICAL SPECIFICATION

AIRCRAFT STRUT & ACCUMULATOR SERVICE TOOL

Model-No.	SIC8000-001	SIC3500-001
Variant	Low Pressure Strut & Accumulator Service Tool	High Pressure Strut & Accumulator Tool
Pressure Range	0-800 psi	0-3500 psi

10.9 AIRCRAFT WHEEL & TYRE HANDLING

HYDRO PARTNER PRODUCT NEWBOW AEROSPACE GROUND SUPPORT EQUIPMENT

DESCRIPTION

The mobile aircraft wheel handling dolly is designed to facilitate the storage and transportation of aircraft wheels or tyres.

Offered as a single or double bay unit, the operator can easily place one or two wheels inside the frame for safe handling and manoeuvring. Equipped with four castor wheels (rear swivelling with footbrake) and a heavy duty low-level loading tray, the task can be undertaken by a single person.

The aircraft wheels can be fully secured into the frame by positioning the drop-fit bar into the locators. Additional straps and restraints are not required. The unit is suited to the hangar or airport environment and offers additional user health & safety compliance when handling heavy aircraft wheels or tyre.

PRODUCT FEATURES

- Safe & efficient handling and moving of aircraft wheels & tyres
- Available as a single or double bay unit
- Fully mobile
- Heavy-duty low-level loading tray for one person use
- Castor wheels (rear swivelling with foot brake)
- Powder coat finish (RAL 1028 standard)
- Available to cover all size aircraft wheels and tyres
- Single or double wheel handling
- Manual handling is health and safety compliant

BENEFITS

- One person use
- Easy transportation of wheels or tyres

TECHNICAL SPECIFICATION

AIRCRAFT WHEEL & TYRE HANDLING

Model-No.	Variant	Measurement
NBWS-2WB	2-Bay wide-body wheels	1,540 mm x 1,390 mm x 1,200 mm 60.6 inch x 54.7 inch x 47.2 inch
NBWS-1WB	1-Bay wide-body wheel	1,540 mm x 720 mm x 1,200 mm 60.6 inch x 28.3 inch x 47.2 inch
NBWS-2NB	2-Bay narrow-body wheels	1,440 mm x 1,190 mm x 1,200 mm 56.7 inch x 24.4 inch x 47.2 inch
NBWS-1NB	1-Bay narrow-body wheel	1,440 mm x 620 mm x 1,200 mm 56.7 inch x 24.4 inch x 47.2 inch

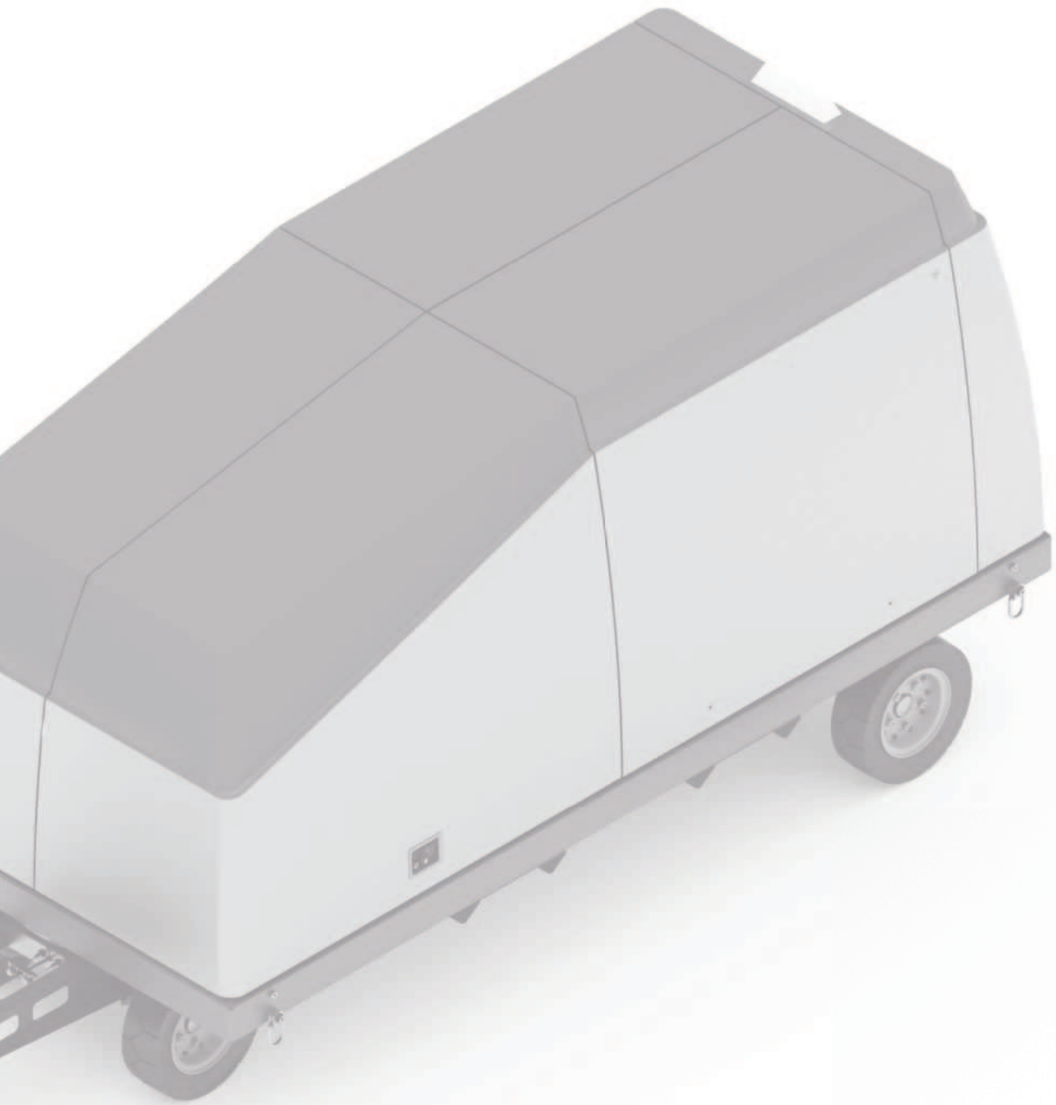

11

WASTE LINE CLEANING

ATA CHAPTER 38

11.1 WASTE LINE CLEANING

HYDRO PARTNER PRODUCT TEST-FUCHS

DESCRIPTION

The importance of proper vacuum waste tube maintenance is obvious; to avoid unscheduled events and lavatory malfunctions. The Waliclean has been developed as full automatic vacuum waste line cleaning systems for a whide range of aircraft types.

Waliclean is the outcome of a joint development project of Austrian Airlines (Lufthansa Group), vacuum waste tube maintenance technicians (inventors) with decades of specific work experience and TEST-FUCHS a leading manufacturer of high-tech GSE and aerospace test equipment. The main targets of the development have been a very cost effective opperation (without the need of costly special chemicals), a easy and fast processing and in a safe and predictable way (best possible cleaning results independent of operator experience).

After pushing "start" no further action required until cleaning is completed - A cleaning during overnight stops is possible.

PRODUCT FEATURES

- Fully automatic cleaning process (no monitoring required)
- Automatic leakage test of vacuum waste line system before cleaning process start-up
- Implementation during standard maintenance tasks (e.g. Line Maintenance Check)
- Preselectable cleaning time enables high flexibility, perfect cleanliness is provided within a few hours
- Implementation for already significantly clogged waste lines as well as for preventive cleaning
- Environmental friendliness is ensured by usage of water and citric acid as cleaning agents
- 2 electronically controlled pumps
- 2 pressure sensors (supply and return)2 EA strain relief for cleaning hoses
- Large heated reservoir (100 gal)
- Permanent automatic observation and regulation of the pressure (vacuum)
- Automatic change of flow direction (wide-body)
- Concurrent cleaning of two systems (wide-body)
- Heated HEPA (High-efficiency particulate absorption) filter for reservoir air vent

AVAILABLE ACCESSORIES

- Dust cover
- Additional waste water hose 10 m (33 ft) with couplings and caps, stored in a separate shelf between the fork lift access points

STANDARD ACCESSORIES

- 1 EA water supply hose, 20 m (65 ft), on hose reel with standard claw coupling (GEKA)
- 3 EA cleaning hose, 20 m (65 ft) each, on hose reel with couplings
- 2 EA blanking caps for cleaning hose
- 2 EA A/C sensor head, each with a sensor cable (40 m (130 ft)) on cable reel for measurement and monitoring
- 1 EA A/C adapter 0,4 m, 0° to connect cleaning hoses to the vacuum waste line system
- 1 EA A/C adapter 0,4 m, 90° to connect cleaning hoses to the vacuum waste line system
- 1 EA electrical connection cable, 20 m (65 ft), with CEE-plug (32 A)
- 1 EA rope, 20 m (65 ft), with carabiner to lift the cleaning hoses up to cabin height and bag for storage
- 2 EA strain relief for cleaning hoses
- 3 EA blanking caps A/C Waste Line (in case, leaking toilets can be repaired and pipes can be blanked off)
- 1 EA waste water hose, 10 m (33 ft), with couplings and caps, stored in an extractable drawer
- 1 EA ball valve "SUPPLY" (to avoid leaking of cleaning fluid in the A/C while connecting or disconnecting)
- 1 EA ball valve "RETURN" (to avoid leaking of cleaning fluid in the A/C while connecting or disconnecting)
- 2 bags of citric acid (25 kg each) for initial cleaning

OPTIONS

- Continuous-flow heater
- Motor drive for hose reel
- Tool box with drawer and storage shelf for citric acid
- Spring-loaded chassis
- Cover paint alternative to standard
- Connection for waste service truck
- Drain pump

BENEFITS

- Cleaning during overnight stops is possible
- User friendly ergonomic setup and operation
- Environmental friendliness
- Fully automatic cleaning process
- Minimized service time
- On-site service
- Everything needed is stowed on the WLC1
- Certified for the use on A320 (all), A330/ A340, A350, A380

TECHNICAL SPECIFICATION
WASTE LINE CLEANING

Model-No.		WLC1
Operating conditions	Ambient temperature	5 to 50 °C (41 to +104 °F)
	Storage temperature	0 to 60 °C (32 to +140 °F)
	Noise emission	max. 63 dB (A) in 1 m distance
Electrical supply	Main supply	3/ PE AC 50/60 Hz 380 – 480 V
	Nominal current	max. 21 A (max. 32 A with option B)
	Power	14.6 kVA (max. 22.1 kVA with option B)
	Preliminary fuse (electricity- and performance characteristcis at 400 V 50 Hz)	25 A gL (max. 32 A gL with option B)
Dimensions and weight	Length	2,850 mm 112.2 inch
	Width	1,600 mm 63.0 inch
	Height	1,500 mm 59.1 inch
	Weight	approx. 1,200 kg approx. 2,646 lbs
Airbus applications		**A318** **A319ceo/ A319neo** **A320ceo / A320neo** **A321ceo / A321neo** A330 A350 A380
Boeing applications		B737 B767 B747 B777 B787

11.2 MOBILE LAVATORY VACUUM BLOCKAGE REMOVER

HYDRO PARTNER PRODUCT TESTFUCHS

DESCRIPTION

No more grounding of the A/C - The Vacuum Toilet Blockage Remover is an all-purpose equipment to clear and remove pipeline blockage of vacuum-lavatory systems on aircraft.

It has been developed for daily use after the aircraft returns from a flight and reports a blockage.

By negative pressure the blockage in the waste line can be sucked out. The system requires short time and reduces the downtime of aircraft.

PRODUCT FEATURES

- All-purpose equipment to clear and remove pipeline blockage of vacuum-lavatory systems on A/C
- By negative pressure the blockage in the waste line will be removed
- Flexible by setup on a car trailer
- Connection for tank drainage with waste service truck
- For indoor and outdoor use
- Unit prepared for worldwide operation (universal motor)
- Big reservoir for several applications
- Unit can be used either in electric mode or diesel mode
- Diesel aggregate gives independence of electric supply
- Simple, manual operation

STANDARD ACCESSORIES

Accessory adapter waste tank drain:

- Adapter 4 inch waste drain and 2 x 2 m 4 inch suction hose with DIN100 integration

OPTIONS

Transport options:

- Standard chassis
- Trailer platform
- Installation into van

BENEFITS

- Cleaning during overnight stops is possible
- User friendly ergonomic setup and operation
- Environmental friendliness
- Fully automatic cleaning process
- Minimized service time
- On-site service
- Everything needed is stowed on the WLC1
- Certified for the use on **A320 (all)**, A330/ A340 (all), A350 (all), A380 (all)

TECHNICAL SPECIFICATION

MOBILE LAVATORY VACUUM BLOCKAGE REMOVER

Model-No.		VTBR2
Dimensions		4,200 mm x 1,860 mm x 2,050 mm 165.4 inch x 73.2 inch x 80.7 inch
Weight		approx. 1350 kg / 2.976 lbs
Operating ambient temperature		5 to 40 °C 41 to 104 °F
Storage temperature		0 to 60 °C 32 to 140 °F
Air humidity		5 to 90 % (non-condensing)
Altitude		max. 2,600 mmSL (8,530 ft)
Mains supply		3/Pe AC 50/60Hz 380-480 V
Power		3.7 kVA
Performance of vacuum pumps		-0.3 to -0.85 bar
Tank volume		300 l 79 USgal
Diesel-engine electrical generator	Cubic capacity	442 ccm
	Consumption	Approx. 1.2 l/ h (0.3 uSgal)
Tank content		27 l 7 uSgal
Airbus applications		**A318** **A319ceo/ A319neo** **A320ceo / A320neo** **A321ceo / A321neo** A330/ A340 A350 A380
Boeing applications		B737 B767 B747 B777 B787

11.3 WASTE WATER TRAILER FOR WLC1

HYDRO PARTNER PRODUCT TESTFUCHS

DESCRIPTION

The Waste Water Trailer is developed for easy, clean and comfortable transport of WLC1's cleaning fluid with optional dosage unit for automatic neutralization.

PRODUCT FEATURES

- Integrated pump to drain WLC1 and itself
- Acid- and alkali-resistant design
- Easy manoeuverability trailer with forklift access points
- 20 m power connection cable

OPTIONS

A wide range of additional options is available

- Fully automatic dosage and injection of caustic soda for neutralization of cleaning fluid
- Indicator lights to show status of neutralization
- Container for dosage pump supply .

TECHNICAL SPECIFICATION
WASTE WATER TRAILER FOR WLC1

Model-No.	WWT1500
Hydraulic parameter	Max. waste water tank capacity: 1500 l (396 USgal)
Electrical supply (requirements)	3/ PE AC 50/ 60 Hz 380 to 480 V
Dimensions (length x width x height)	3,200 mm x 1,800 mm x 1,700 mm 125.9 inch x 70.8 inch x 66.9 inch
Measurement	pH-value measurement
Operating conditions	Operating temperature: 5 to 45 °C (41 to 113 °F) Storage temperature: 0 to 60 °C (32 to 140 °F) Usage: In a non-explosive area Noise emission: max. 70 dB (A) in 1 m (39.4 inch) distance
Airbus applications	**A318** **A319ceo/ A319neo** **A320ceo / A320neo** **A321ceo / A321neo** A330/ A340 A350 A380
Boeing applications	B737, B767, B747, B777, B787

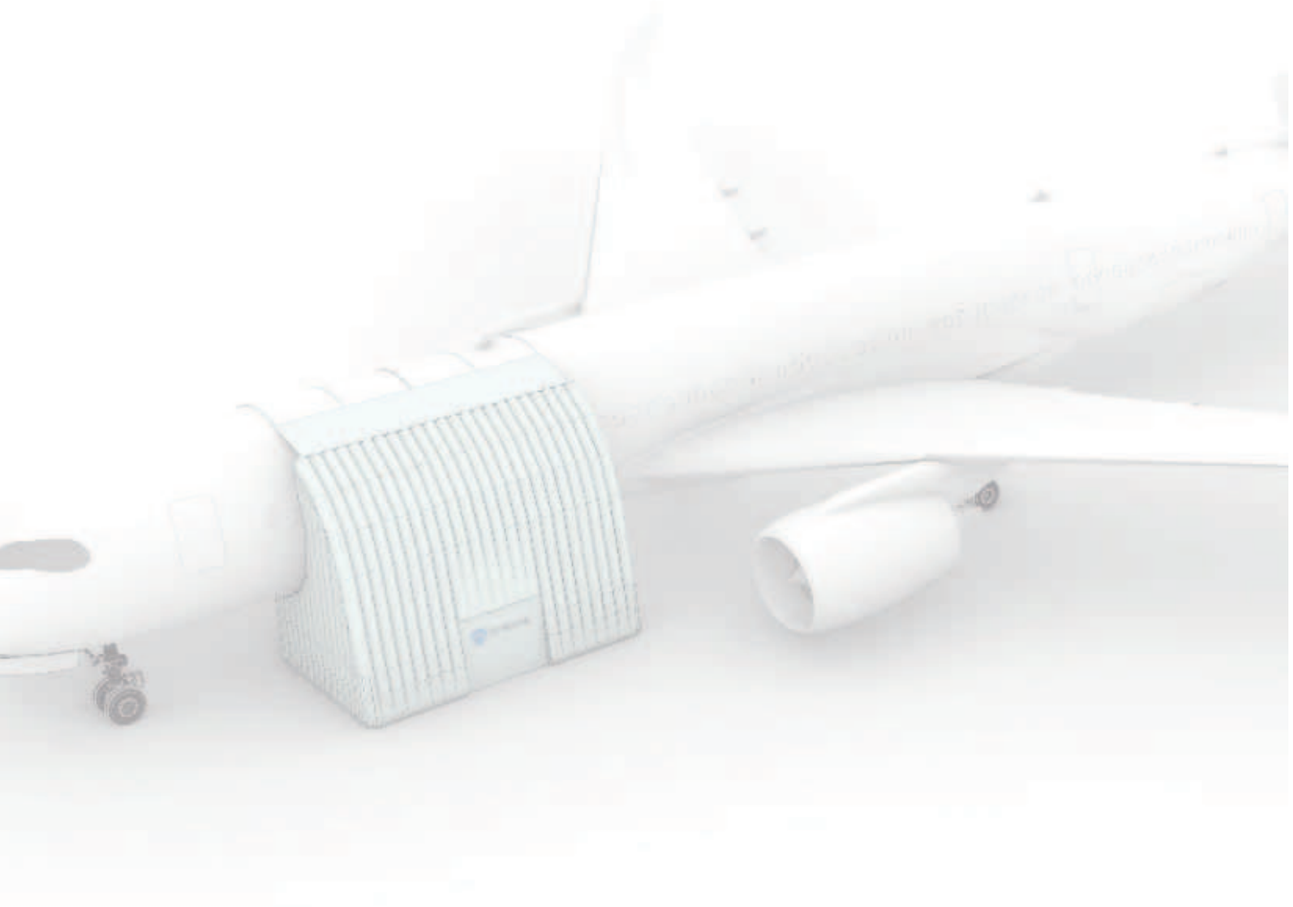

12

FUSELAGE

ATA CHAPTER 53

12.1 IGLOOMX FUSELAGE SHELTER

HYDRO PARTNER PRODUCT JB ROCHE

DESCRIPTION

The patent protected IglooMX Fuselage Shelter is the ideal tool for fuselage repair tasks.
This shelter can be "docked" to the damaged portion of the fuselage to create a fully controlled environment. It is also a very useful tool when any maintenance work is being undertaken in the cargo bay or for repairs around the door entry areas.

The IglooMX Fuselage Shelter is designed to provide a "hand-in-glove" fit against the fuselage. It is supplied with flexible fabric flanges that can be taped to the body of the aircraft to prevent any ingress of dust or moisture. A similar seal is created between the base tubes of the shelter and the ground.

Optional accessories include air-filtration, dehumidification and temperature control. Positive pressure control is also available if required. Ducts are provided as standard to cater for the necessary air-conditioning equipment.

A lighting kit is available on request; however, this is generally only required for night time work as the shelter fabric allows for very good light transmission. In addition, to composite repair work, the fuselage shelter may be used for window repairs, paint work and aircraft livery.

These shelters feature specially designed fabrics that are both lightweight and tough, providing excellent abrasion and tear resistance. The unique materials are also fire retardant and resistant to hydraulic fluid and fuels, ensuring that they remain functional for many years.

The IglooMX is supplied in a storage bag on wheels, making it easy to move around on the apron or in the hangar. In the unlikely event that the shelter becomes damaged while in use, an on-site repair kit is supplied as part of the package.

The IglooMX kit can be inflated in under 5 minutes and deflated and stored away in approximately 20 minutes.

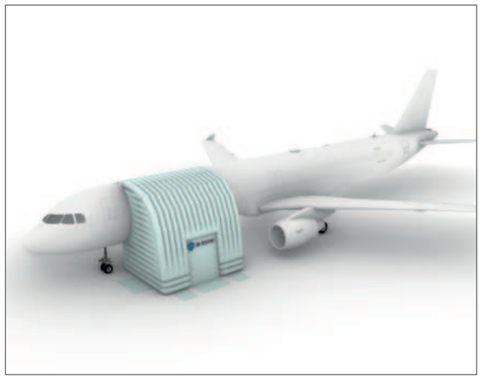

PRODUCT FEATURES

- Installation Crew: four persons
- Inflation time: five minutes
- Folding and re-packing time: 20 minutes
- Strong but lightweight for easy handling
- Fire retardant and resistant to fuels, oils and hydraulic fluids
- Unique patented design
- Can withstand windspeeds of up to 25 knots
- 20 year proven track record with leading airlines, airframers and MRO's

AVAILABLE ACCESSORIES

- Air-conditioning
- Air-filtration package
- Lighting set on tripods
- Dehumidifier
- Water filled ballast bag kit

BENEFITS

- Can be branded with airline logo
- No previous training required
- Provides privacy from passengers during maintenance
- Can be powered using a 5 kVA generator

TECHNICAL SPECIFICATION

FUSELAGE SHELTER

Model-No.	890136
Dimensions inflated (maximal)	6,500 mm x 5,400 mm x 6,100 mm 255.9 inch x 212.6 inch x 240.2 inch
Dimensions (stored)	1,400 mm x 5,400 mm x 6,100 mm 55.1 inch x 212.6 inch x 240.2 inch
Packaged weight	172 kg 379.2 lbs
Temperature ranges	can be used from -30 °C to +70 °C (-22 °F to +158 °F)
Inflation device	2 H.P. Electric Blower
Power supply	110 V or 220 V models available
Inflation device	2 H.P. Electric blower
Applications	**A318** **A319ceo / A319neo** **A320ceo / A320neo** **A321ceo / A321neo**

12.2 IGLOOMX NOSE SHELTER

HYDRO PARTNER PRODUCT JB ROCHE

DESCRIPTION

When your aircraft has been damaged by a bird-strike, lightning-strike or a collision on the apron, it can take a considerable amount of time to source an available hangar to undertake the necessary repairs. The patent protected IglooMX Inflatable Nose Shelter system provides the ideal solution for such events.

This "hangar-in-a-bag" system reduces downtime to a minimum and saves time and money on hangar space rental and towing charges. The Nose Shelter may be used for multiple purposes including windshield replacement, radome composite repairs and nose landing gear maintenance or replacement.

The IglooMX is small enough to ship as part of the fly-away kit. It is inflated and "docked" around the front of the aircraft by following the simple installation instructions provided. Inflation takes less than five minutes with a crew of four to six people.

The Nose Shelter has plenty of space internally for scaffolding, scissors-lift or boom-lift and is supplied complete with heating and filtration ducts.
Once in place, the shelter system will boost your maintenance team's productivity by providing a warm and safe environment in which to work.

These shelters feature specially designed fabrics that are both lightweight and tough, providing excellent abrasion and tear resistance. The unique materials are also fire retardant and resistant to hydraulic fluid and fuels, ensuring that they remain functional for many years.

The IglooMX kit can be deflated and stored away in approximately 20 minutes.

PRODUCT FEATURES

- Installation Crew: 4-6 persons
- Inflation time: 5 minutes
- Folding and re-packing time: 20 minutes
- Strong but lightweight for easy handling
- Fire retardant and resistant to fuels, oils and hydraulic fluids
- Unique patented design
- Can withstand windspeeds of up to 25 knots
- 20 years proven track record with leading airlines, airframers and MRO's

AVAILABLE ACCESSORIES

- Ramp heater
- Air-conditioning
- Lighting set on tripods
- Reusable shipping crate
- Water filled ballast bag kit
- Camcleaner Air-Filtration package
- Dehumidifier package

BENEFITS

- Can be branded with airline logo
- No previous training required
- Provides privacy from passengers during maintenance
- Can be powered by using a 5 kVA generator

TECHNICAL SPECIFICATION

NOSE SHELTER

Model-No.	890133
Dimensions inflated (maximal)	6,500 mm x 9,800 mm x 7,400 mm 255.9 inch x 385.8 inch x 291.3 inch
Dimensions (stored)	1,500 mm x 1,100 mm x 1,100 mm 59 inch x 43.3 inch x 43.3 inch
Packaged weight	200 kg 440.9 lbs
Temperatures ranges	can be used from -30 °C to +70 °C (-22 °F to +158 °F)
Inflation device	2 H.P. Electric Blower
Power supply	110 V or 220 V models available
Applications	**A318** **A319ceo / A319neo** **A320ceo / A320neo** **A321ceo / A321neo**

12.3 MEWP SHELTER

HYDRO PARTNER PRODUCT JB ROCHE

DESCRIPTION

When your aircraft has been damaged by a bird-strike, lightning-strike or a collision on the apron, it can take a considerable amount of time to source an available hangar to undertake the necessary repairs. The inflatable Mobile Elevated Work Platform (MEWP) Shelter system provides the ideal solution for such events.

This universal shelter system reduces downtime to a minimum and saves time and money on hangar space rental and towing charges. The MEWP Shelter will be tailormade to the available Elevated Work Platforms. The MEWP Shelter is small enough to ship as part of the fly-away kit. Inflation takes only 2 minutes with a crew of two people and stays inflated even without further energy supply.

The shelter can be used to get protected access to many different aircraft areas to access the appropiate area from above, below or the side.
Once in place, the shelter system will boost your maintenance team's productivity by providing a safe environment in which to work.

These shelters feature specially designed fabrics that are both lightweight and tough, providing excellent abrasion and tear resistance. The unique materials are also fire retardant and resistant to hydraulic fluid and fuels, ensuring that they remain functional for many years.

The MEWP Shelter is supplied in a storage box, making it easy to move around on the apron. In the unlikely event that the shelter becomes damaged while in use, an on-site repair kit is supplied as part of the package.

PRODUCT FEATURES

- Installation Crew: two persons
- Inflation Time: two minutes
- Folding and re-packing time: five minutes
- Strong but lightweight for easy handling
- Extremely high strength-to-weight ratio
- Fire retardant and resistant to fuels, oils and hydraulic fluids
- Unique patented design
- Can withstand windspeeds of up to 20 knots

OPTIONS

- Dehumidifier
- Air filtration
- Temparature control and positive pressure
- Replacement blower

BENEFITS

- Tailormade for use on existing and available elevated work platforms
- Can be branded with airline logo
- No previous training required
- Provides privacy from passengers during maintenance

TECHNICAL SPECIFICATION

MEWP SHELTER

Model-No.	892019
Dimensions inflated (example only)	3,300 mm x 2,000 mm x 2,500 mm 129.9 inch x 78.7 inch x 98.4 inch
Dimensions (stored) (example only)	1,200 mm x 800 mm x 1,000 mm 47.2 inch x 31.5 inch x 39.4 inch
Packaged weight	100 kg 220.46 lbs
Temperatures ranges	can be used from -30 °C to +70 °C (-22 °F to +158 °F)
Inflation device	Electric Blower
Power supply	110 V 60 Hz or 220 V 50 Hz models available

12.4 INFLATABLE MAINTENANCE HANGAR

HYDRO PARTNER PRODUCT JB ROCHE

DESCRIPTION

When your aircraft has been damaged by a bird-strike, lightning-strike or a collision on the apron, it can take a considerable amount of time to source an available hangar to undertake the necessary repairs. The Inflatable Mainenance Hangar shelter system provides the ideal solution for such events.

This "hangar-in-a-bag" system reduces downtime to a minimum and saves time and money on hangar space rental and towing charges. The Inflatable Mainenance Hangar may be used for multiple purposes including scheduled and unscheduled maintenance, engine or landing gear replacement.

The shelter is small enough to ship as part of the fly-away kit. It is inflated by following the simple installation instructions provided. Inflation takes less than one hour with a crew of about 6 people. The Iinflatable Mainenance Hangar has plenty of space internally for scaffolding, scissors-lift or boom-lift and is supplied complete with heating and filtration ducts. Once in place, the shelter system will boost your maintenance team's productivity by providing a safe environment in which to work.

These shelters feature specially designed fabrics that are both lightweight and tough, providing excellent abrasion and tear resistance. The unique materials are also fire retardant and resistant to hydraulic fluid and fuels, ensuring that they remain functional for many years.

The shelter is supplied in storage bags on wheels, making it easy to move around on the apron. In the unlikely event that the shelter becomes damaged while in use, an on-site repair kit is supplied as part of the package. The Inflatable Mainenance Hangar is available in different sizes.

PRODUCT FEATURES

- Installation Crew: six persons
- Inflation Time: 60 minutes
- Folding and re-packing time: 90 minutes
- Strong but lightweight for easy handling
- Fire retardant and resistant to fuels, oils and hydraulic fluids
- Unique patented design
- Can withstand windspeeds of up to 20 knots
- 20 year proven track record of different maintenance shelters with leading airlines and MRO's

AVAILABLE ACCESSORIES

- On-site repair kit
- Installation instructions
- Electrical blower (110 V or 220 V)

OPTIONS

- Ramp heater
- Air-conditioning
- Lighting set on triopod-jacks
- Replacement blower
- Reusable shipping crate
- Water filled ballast bag kit
- Camcleaner air-filtration package
- Dehumidifier package

BENEFITS

- Different sizes available – can be customized to the individual needs
- Suitable for use on smaller aircraft and helicopter types (civil and military)
- No previous training required
- Provides privacy from passengers during maintenance
- Can be powered by using a 5 kVA generator
- Can be branded with airline logo

TECHNICAL SPECIFICATION

INFLATABLE MAINTENANCE HANGAR

Model-No.		89XXA
Dimensions inflated (example only)	Outside	24,000 mm x 21,000 mm x 11,000 mm 944.9 inch x 326.8 inch x 433.1 inch
	Sable space inside	21,000 mm x 21,000 mm x 9,000 mm 826.8 inch x 826.8 inch x 354.3 inch
Inflation device		Electric Blower
Power supply		110 V 60 Hz or 220 V 50 Hz models available
Temperature ranges		Can be used from -30° C to +70° C -22° F to +158° C
Applications		On smaller aircraft and helicopter types (civil or military) Useable also for partial aircraf coverage - e.g. A320 family wing

12.5 HANGAR DOOR INFILL

HYDRO PARTNER PRODUCT JB ROCHE

DESCRIPTION

Maintenance hangar space is a rare resource. In many cases the available hangar resources are too tight for the number of aircraft to be maintained or even too small for the appropriate aircraft type. In these cases it would be beneficial to put only parts of the aircraft into the hangar.

Unfortunately usually the hangar would need to be modified with an iris door. Such permanent modifications take long time, are expensive and in some cases need several permissions under building law.Our Hangar Door Infill is an easy, cost effective, flexible and fully reversible solution to create an iris door in the hangar. Every Hangar Door Infill will be tailored to the appropriate hangar environment and is available at very short lead-time. It is small enough to ship as part of the fly-away kit. Inflation takes only 2 minutes with a crew of 2-3 people.

Once in place, the shelter system will boost your maintenance team's productivity by providing a safe environment in which to work.
These shelters feature specially designed fabrics that are both lightweight and tough, providing excellent abrasion and tear resistance. The unique materials are also fire retardant and resistant to hydraulic fluid and fuels, ensuring that they remain functional for many years.

The Hangar Door Infill is supplied in a storage box. In the unlikely event that the shelter becomes damaged while in use, an on-site repair kit is supplied as part of the package.

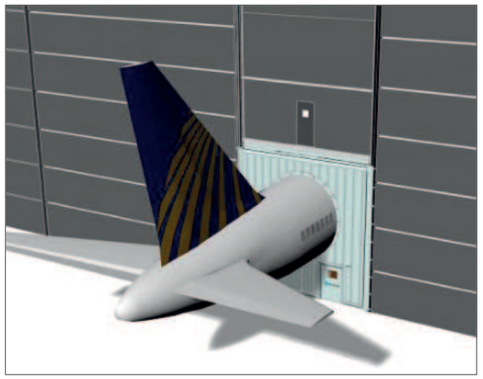

PRODUCT FEATURES

- Maximises hangar space
- Controls the temperature within the hangar
- No changes to the existing door frame required
- Installation crew: 2-3 persons
- Inflation time: 2 minutes
- Folding and re-packing time: 5 minutes
- Strong but lightweight for easy handling
- Extremely high strength-to-weight ratio
- Fire retardant and resistant to fuels, oils and hydraulic fluids
- Unique patented design
- Can withstand windspeeds of up to 20 knots

AVAILABLE ACCESSORIES

- On-site repair kit
- Installation instructions
- Electrical blower (110 V or 220 V)
- Plastic box

OPTIONS

Customer logo application

BENEFITS

- Flexible and fully reversible solution
- No permanent hangar modification required, no need in permissions under building law
- Tailormade for use on existing hangar doors
- Can be branded with airline logo
- No previous training required

TECHNICAL SPECIFICATION

HANGAR DOOR INFILL

Model-No.	892XX
Dimensions inflated (example only)	7,300 mm x 6,700 mm x 700 mm 287.4 inch x 263.8 inch x 27.6 inch
Dimensions stored (example only)	1,200 mm x 800 mm x 1,000 mm 47.2 inch x 31.5 inch x 39.4 inch
Inflation device	Electric Blower
Power supply	110 V 60 Hz or 220 V 50 Hz models available
Temperature ranges	Can be used from -30° C to +70° C -22° F to +158° C
Applications	Tailormade for existing hangars for use on all customer defined aircraft types

12.6 IRIS DOOR INFILL

HYDRO PARTNER PRODUCT JB ROCHE

DESCRIPTION

Maintenance hangar space is a rare resource. In many cases the available hangar resources are too tight for the number of aircraft to be maintained or even too small for the appropriate aircraft type. In these cases it would be beneficial to put only parts of the aircraft into the hangar.

Hangars with Iris Doors are an adequate solution to win additional capacity – but Iris Doors are designed for specific aircraft types or at least fuselage diameters and need adequate protection bumpers to avoid damages on the fuselage. The inflatable Iris Door Infill solves these problems. During inflation it closes the gap between the fuselage and the hangar iris with fabrics and air only. The fuselage is protected while the hangar is fully sealed.

Every Iris Door Infill will be tailored to the appropriate hangar environment and is available at very short lead-time. It is small enough to ship as part of the fly-away kit. Inflation takes only 2 minutes with a crew of 2-3 people. Once in place, the system will boost your maintenance team's productivity by providing a safe environment in which to work. These shelters feature specially designed fabrics that are both lightweight and tough, providing excellent abrasion and tear resistance. The unique materials are also fire retardant and resistant to hydraulic fluid and fuels, ensuring that they remain functional for many years. The Iris Door Infill is supplied in a storage box. In the unlikely event that the shelter becomes damaged while in use, an on-site repair kit is supplied as part of the package.

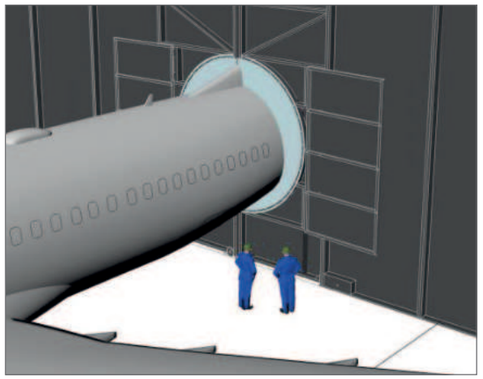

PRODUCT FEATURES

- Maximises hangar space
- Controls the temperature within the hangar
- No changes to the existing door frame required
- Installation crew: 2-3 persons
- Inflation time: 2 minutes
- Folding and re-packing time: 5 minutes
- Strong but lightweight for easy handling
- Extremely high strength-to-weight ratio
- Fire retardant and resistant to fuels, oils and hydraulic fluids
- Unique patented design
- Can withstand windspeeds of up to 20 knots

AVAILABLE ACCESSORIES

- On-site repair kit
- Installation instructions
- Electrical blower (110 V or 220 V)
- Plastic box

BENEFITS

- Flexible and fully reversible solution
- Tailormade for use on existing hangar doors
- Easily installation process
- Can be permanently inflated and fixed for use when required
- No previous training required

TECHNICAL SPECIFICATION

IRIS DOOR INFILL

Model-No.	892XY
Dimensions inflated (example only)	4,600 mm x 4,500 mm x 220 mm 181.1 inch x 177.2 inch x 8.7 inch
Inflation device	Electric Blower
Power supply	110 V 60 Hz or 220 V 50 Hz models available
Temperature ranges	Can be used from -30° C to +70° C -22° F to +158° C
Applications	Tailormade for existing hangars for use on all customer defined aircraft types

12.7 WIFI ANTENNA SHELTER

HYDRO PARTNER PRODUCT JB ROCHE

DESCRIPTION

Maintenance hangar space is a rare resource. Especially the blockage of hangars for small repairs or modifications with low man-power usage is ineffective. Nevertheless some of the small repairs and modifications e.g. at the Wifi Antenna need a protected environment. Such situation can be easily solved with the use of the Wifi Antenna Shelter.

This shelter will be inflated on top of the fuselage and fixed with belts around the fuselage to stay in place. Access to the shelter can be gained via mobile access equipment (e.g. high-lifter, mobile dockings or ladders). Once in place, the shelter system will boost your maintenance team's productivity by providing a safe environment in which to work.

These shelters feature specially designed fabrics that are both lightweight and tough, providing excellent abrasion and tear resistance. The unique materials are also fire retardant and resistant to hydraulic fluid and fuels, ensuring that they remain functional for many years.The Wifi Antenna Shelter is supplied in a storage box.

In the unlikely event that the shelter becomes damaged while in use, an on-site repair kit is supplied as part of the package.

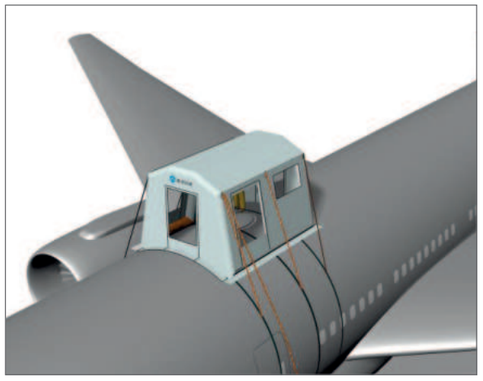

OPTIONS

- Dehumidifier
- Air filtration
- Temparature control
- Replacement blower
- Logo application

PRODUCT FEATURES

- Installation crew: 2 persons
- Inflation time: 2 minutes
- Folding and re-packing time: 5 minutes
- Can stay inflated without further air supply
- Strong but lightweight for easy handling
- Extremely high strength-to-weight ratio
- Fire retardant and resistant to fuels, oils and hydraulic fluids
- Unique patented design
- Fire retardant and resistant to fuels, oils and hydraulic fluids
- Can withstand windspeeds of up to 20 knots

BENEFITS

- Eliminates the need for a hangar
- Lightweight, compact & portable
- Quick installation & deinstallation time
- Can be branded with airline logo
- No previous training required
- Provides privacy from passengers during maintenance

TECHNICAL SPECIFICATION

WIFI ANTENNA SHELTER

Model-No.	890184
Dimensions inflated (example only)	4,000 mm x 3,200 mm x 2,600 mm 157.5 inch x 125.9 inch x 102.4 inch
Dimensions stored	1,200 mm x 800 mm x 1,000 mm 47.2 inch x 31.5 inch x 39.4 inch
Inflation device	Electric Blower
Power supply	110 V 60 Hz or 220 V 50 Hz models available
Temperature ranges	Can be used from -30° C to +70° C -22° F to +158° C
Applications	Use on a wide range of aircraft types

13

NACELLES / PYLONS

ATA CHAPTER 54

13 NOSE COWL DOLLY AND INSTALLATION DEVICE

HYDRO PARTNER PRODUCT LIFTSAFE FALL PROTECTION INC.

DESCRIPTION

This new and innovative unit will allow for the safe removal and installation of the nose cowl without the need for an overhead crane.

The Nose Cowl Dolly is able to handle the aircraft nose cowls on a variety of aircraft engines.

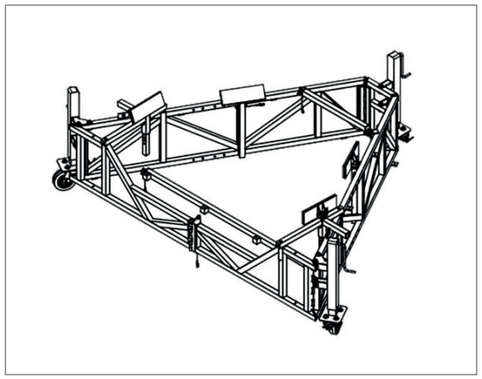

PRODUCT FEATURES

- Ready to ship AOG unit
- Lightweight and compact shipping configuration
- Caster details: 10 inch with brakes and swivel
- High-grade materials
- Padding material
- One Person movement
- Material type: Aluminum
- Powder coated finish

BENEFITS

- Safety and reliability
- Ergonomic design
- Unrivalled quality and durability

TECHNICAL SPECIFICATION

NOSE COWL DOLLY AND INSTALLATION DEVICE

Model-No.	DF071560-01
Material	Aluminum
Footprint	2,134 mm x 2,737 mm 84.0 inch x 107.75 inch
Height	Variable
Weight	68 kg 150 lbs
Foot Print	2,134 mm x 2,737 mm 84 inch x 107.75 inch
Shipping Dimensions	447 mm x 699 mm x 2,417 mm 17.56 inch x 27.5 inch x 95.125 inch
Certifications	ANSI-ASC A14.7, BS EN 131.7 & CE

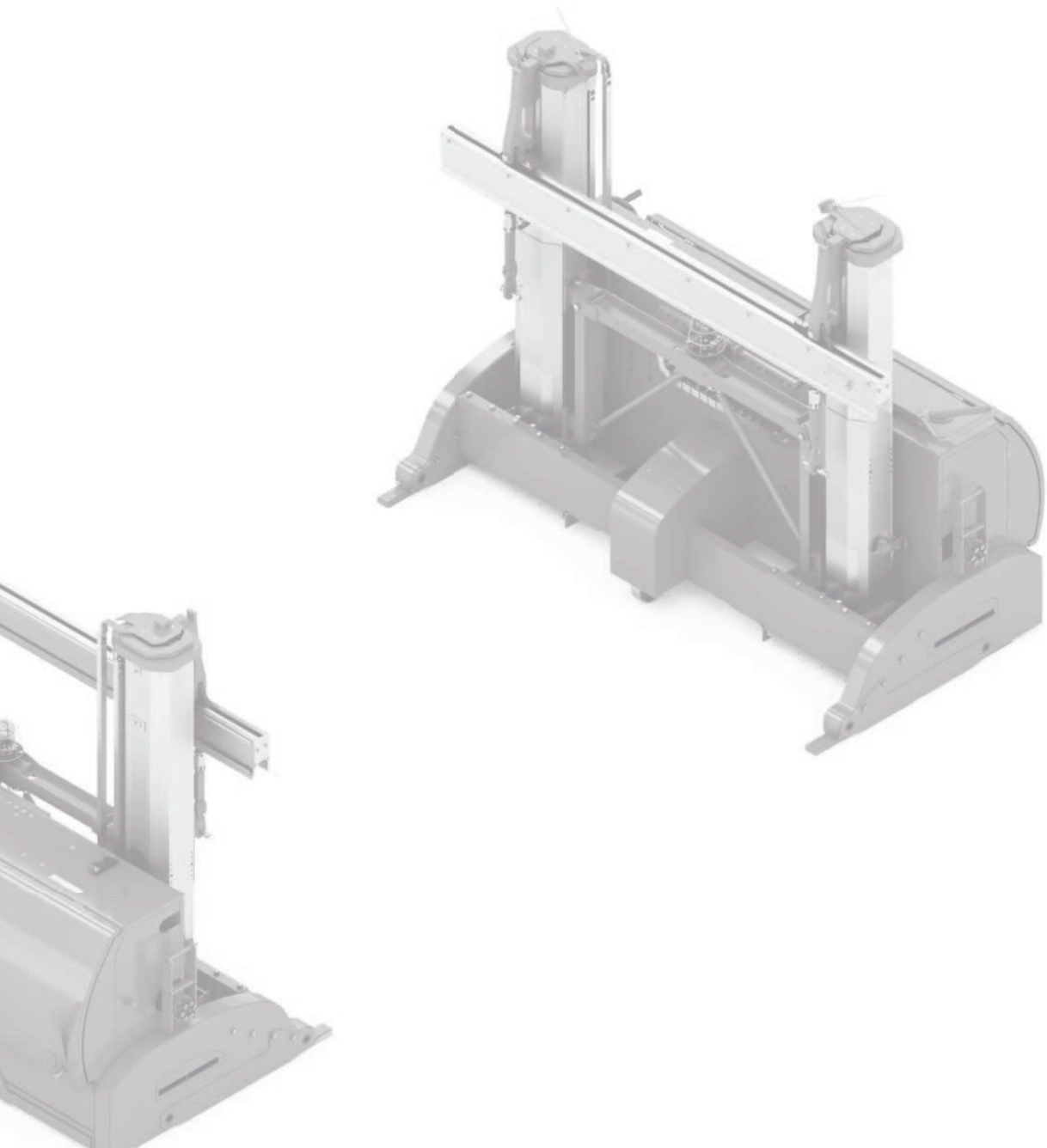

14

POWER PLANT

ATA CHAPTER 71

14.1 UNIVERSAL ENGINE CHANGE SYSTEM

DESCRIPTION

The COBRA Engine Change System has been designed to ensure a fast engine change and to minimize operational failure and technical risks.

This offers you tremendous benefits by reducing your costs through minimal aircraft downtimes.

Your maintenance team has been waiting for this technology — now it is here at HYDRO.

STANDARD CHARACTERISTICS

- Universal, innovative engine change system for wing-mounted engines
- Interchangeable adapters for flexible and universal handling of engine dollies, cradles and engine transportation stands
- Semi-automatic lifting of engine, dolly and cradle or transportation stand
- Primary and an interchangeable secondary unit connected with a cable

PRODUCT FEATURES

- APM – automatic preload maintaining
- LSF – lowering safety feature
- Electronic load limiting
- Emergency lowering feature
- APR – automatic pressure regulator
- Password protection
- 4 pillars: each pillar can be controlled independently via a mobile panel
- Movement in 6 axis to adapt to the angle of pylon to ease the removal/ installation procedure
- Full CE certification and optional UL-compliance

AVAILABLE ACCESSORIES

- Transportation trailer with or without diesel power unit
- Spare part kit
- Load cell calibration kit
- Diesel power unit
- Flexible and interchangeable adapter concept for most common narrow-body and wide-body aircraft*
- Data logger
- Laser target module
- Inclination sensor

* interchangeable adapter/ beam/ lug combination for COBRA operation depends on the engine stand

BENEFITS

- Airbus and Boeing approved
- Up to 70 % time saving for engine changes (compared to bootstrap)
- Short amortization period on investment cost
- Protects the aircraft, engine and operator with various safety features
- Easy operation
- On-site service

TECHNICAL SPECIFICATION

UNIVERSAL ENGINE CHANGE SYSTEM

Model-No.			TP91G
Performance	Nominal capacity		16.3 t (36,000 lbs)
	Max. lift stroke		
		Long pillar	2,800 mm (110 inch)
		Short pillar	1,700 mm (67 inch)
	Lifting speed		5 mm / sec or 10 mm / sec [fast mode]
			(0.2 inch / sec or 0.5 inch / sec [fast mode])
	Power supply		200 – 480 V; 50 – 60 Hz
Movability	Max. horizontal movement		± 120 mm (4 inch)
	Max. transversal movement		± 150 mm (6 inch)
	Max. inclination longitudinal		10°
Weight	Weight primary		1,200 kg (2,645 lbs)
	Weight secondary		1,200 kg (2,645 lbs)

14.2 ENGINE PEDESTAL SET

DESCRIPTION

Engine Pedestal Sets (EPS) are multi-purpose systems which can be used for various engine types from different engine manufacturers.

For each new engine combination only a new adapter set is required while the pedestals are universal and used for any combination.

The basic set consists of two pedestals used at the front and two pedestals used at the rear of the engine. Due to the universal application of the basic set less storage space is required.

PRODUCT FEATURES

- Consists of two pedestals used at the front and two pedestals used at the rear engine

AVAILABLE ACCESSORIES

- Spring loaded ball castors for easy positioning of pedestals

OPTIONS

Engine Adapter Kit

Engine adapter kits are available separately for each engine type and are attached to the basic set. Each engine adapter kit includes two rear adaptors and two front adaptors. E.g. 47001-026-000 for A350 — Trent XWB (Please note that additionally 1 x RRT059450-1 is required).

BENEFITS

- Universal application
- Cost savings
- Space savings
- On-site service

TECHNICAL SPECIFICATION
ENGINE PEDESTAL SET

Model-No.	EPS001-003
Weight basic set	450 kg 992 lbs
Applications	V2500-A1/ A5 - Airbus A320 Family (47001-003-000) CFM56-5A/ 5B - Airbus A320 Family (47001-001-000)

14.3 ENGINE DOLLY / ENGINE CRADLE

DESCRIPTION

Engine Cradles and Engine Dollies has been specially designed for the inshop engine transportation. HYDRO Engine Cradles in conjunction with the suitable Engine Dollys can be used for various purposes. It is the perfect equipment to move and store engines in the hangar and air field environment.

The HYDRO Engine Dollys and Cradles are also ready to support the engine removal and installation with bootstrap and COBRA engine change system.

PRODUCT FEATURES

Engine Dolly (ED005)

- Rigid steel frame
- Fork lift tubes / interface to COBRA
- 2 axles, fitted with pneumatic tires
- 1 axle steerable
- Tow - Bar
- Fixing brake
- Rail or pin connection system
- Skydrol resistant paint
- Label with A / C application

Engine Cradle

- Welded steel frame
- Bootstrapping points for engine change
- Pin or rail interface for easy loading of cradle into dolly pins of ED005
- Rear fixture without threaded rod in accordance with Swiss requirement
- Skydrol resistant paint

BENEFITS

- Multipurpose application, on one dolly various cradles can be mounted
- Ergonomic and user-friendly design
- On-site service

TECHNICAL SPECIFICATION
ENGINE DOLLY / ENGINE CRADLE

Applicable engine cradles	ED005-009 will fit for the following applications in conjunction with the specific engine cradle:	
	Engine	**Cradle**
	CFM56-5A/5B	EC004-005
	V2500-A1/-A5	EC001-002

14.4 HOISTING SLING

DESCRIPTION

Universal sling for CFM56 and V2500 engines.

PRODUCT FEATURES

- Basic beam
- The basic beam consists of an I-beam and an adjustable suspension unit, which can be adjusted by means of a hand wheel
- Engine adapters
- The front (FWD) and rear (AFT) adapters, which are attached to the basic beam by means of levers, are used to receive and attach V2500 engines
- Wooden storage box
- All adapters, connection- and moving parts are either galvanized or nitrated
- Operation and maintenance manual, including spare parts list
- Test certificate

BENEFITS

- User friendly ergonomic setup and operation
- Universal application
- On-site service

TECHNICAL SPECIFICATION

HOISTING SLING

Model-No.	HG49
Lifting Capacity	4000 kg 8,818.5 lbs
Weight basic beam w/o adapter	305 kg 672.4 lbs
Applications	**A320 Family CFM56-5A / -5B and V2500** A340 CFM56-5C B737 Classic/NG CFM56-3 and CFM56-7B

14.5 IGLOOMX ENGINE CHANGE SHELTER

HYDRO PARTNER PRODUCT JB ROCHE

DESCRIPTION

AOG incidents can lead to costly delays and scheduling difficulties for operators. The patent protected IglooMX Inflatable Engine Change Shelter system provides the ideal solution for such events.

This "hangar-in-a-bag" system reduces downtimes to a minimum and enables the AOG team to get the aircraft back in the air in the least possible time, thereby saving on costly hangar rentals and lost man hours.

The IglooMX Shelter system is small enough to ship as part of the fly-away kit. It may be set up on either engine to encapsulate both engine and pylon. By following the simple installation instructions provided, this kit can be installed in a matter of minutes by a crew of three to four people.

Once in place, the shelter system will boost your maintenance team's productivity by providing a warm and safe environment in which to work.
These shelters feature specially designed fabrics that are both lightweight and tough, providing excellent abrasion and tear resistance. The unique materials are also fire retardant and resistant to hydraulic fluid and fuels, ensuring that they remain functional for many years.

The IglooMX is supplied in a storage bag on wheels, making it easy to move around on the apron. In the unlikely event that the shelter becomes damaged while in use, an on-site repair kit is supplied as part of the package.

The IglooMX kit can be deflated and stored away in around 15 minutes.

PRODUCT FEATURES

- Installation Crew: 3-4 Persons
- Inflation Time: 5 minutes
- Folding and re-packing time: 15 minutes
- Strong but lightweight for easy handling
- Fire retardant and resistant to fuels, oils and hydraulic fluids
- Unique patented design
- Can withstand windspeeds of up to 25 Knots
- 20 years proven track record with leading airlines, airframers and MRO's

AVAILABLE ACCESSORIES

- Ramp heater
- Air-conditioning
- Lighting set on tripods
- Reusable shipping crate
- Water filled ballast bag kit

BENEFITS

- Can be branded with airline logo
- No previous training required
- Provides privacy from passengers during maintenance
- Models available for use with HYDRO COBRA Engine Change System
- Airbus approved
- Can be powered using a 5 kVA Generator

TECHNICAL SPECIFICATION

ENGINE CHANGE SHELTER

Model-No.	890145	890167
Dimensions inflated (maximal)	8,400 mm x 8,100 mm x 4,300 mm 330.7 inch x 318.9 inch x 169.3 inch	6,800 mm x 8,100 mm x 4,600 mm 330.7 inch x 318.9 inch x 169.3 inch
Dimensions (stored)	1,400 mm x 1,000 mm x 1,000 mm 55.1 inch x 39.4 inch x 39.4 inch	1,400 mm x 1,000 mm x 1,100 mm 55.1 inch x 39.4 inch x 39.4 inch
Packaged weight	170 kg 374.8 lbs	175 kg 374.8 lbs
Temperatures ranges	Can be used from -30 °C to +70 °C -22 °F to +158 °F	Can be used from -30 °C to +70 °C -22 °F to +158 °F
Inflation device	2 H.P. Electric Blower	2 H.P. Electric Blower
Power supply	110 V 60 Hz or 220 V 50 Hz models available	110 V 60 Hz or 220 V 50 Hz models available
Airbus applications	**A318** **A319ceo / A319neo** **A320ceo / A320neo** **A321ceo / A321neo**	**A318** **A319ceo / A319neo** **A320ceo / A320neo** **A321ceo / A321neo**
Boeing applications		B737
Other applications		Embraer E-Jets

TECHNICAL SPECIFICATION

COBRA ENGINE CHANGE SHELTER*

Model-No.	890195
Dimensions inflated	12,600 mm x 12,300 mm x 9,000 mm 496 inch x 484.3 inch x 354.3 inch
Dimensions (stored)	2,000 mm x 1,400 mm x 1,100 mm 78.7 inch x 55.1 inch x 43.3 inch
Packaged weight	600 kg 1322.8 lbs
Power supply	110 V 60 Hz or 220 V 50 Hz models available

*temporarily dimensions

14.6 ENGINE ACCESS STAND

HYDRO PARTNER PRODUCT LIFTSAFE FALL PROTECTION INC.

DESCRIPTION

This Engine and Aircraft Maintenance Access Stand is designed for the under and over cowling access requirements of several Airbus and Boeing wide-body aircraft as well as the A320 Family and the Bombardier CRJ. The stand facilitates safe access to nose cowls, fan cowls and pylon disconnect zones, providing a safe working solution to many of the traditionally difficult under-cowling maintenance locations. The unit is also designed to safely access the same points outside of cowling, specifically forward and aft pylon service points.

The hydraulic pitch and height-adjustment allow for the diverse angles and height requirements frequently used when servicing aircraft. The stand contains extensive aluminum construction for easy movement and corrosion-resistant powder coat finish for longevity.

The design of the unit allowes in addition the use for other maninenance access areas at the different aircraft types including the Embraer ERC and the Bombardier CRJ.

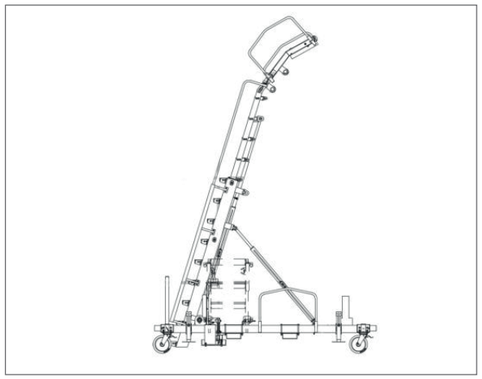

PRODUCT FEATURES

- Anti-fatigue ladder rungs rather than narrow ladder rungs. This ensures comfort when using the stands e.g. to change LRU's
- Fall restraint anchor points
- The height and angle adjustments on this stand allow for diverse angle and height changes frequently required when servicing aircraft
- Extensive aluminum construction for easy movement and a corrosion-resistant powder coat finish for longevity
- 20 years proven track record with leading airlines, airframers and MRO's
- Designed and tested in accordance with ANSI-ASC A14.7 and BS EN 131.7
- Padding material equipped
- Controls: Hydraulic foot pump
- Ergonomic design
- High-grade materials
- One person movement
- Powder coated finish

APPLICATIONS FOR A320

- Engines under "C" duct
- Pylons
- Bulk Cargo
- Aft pressure nulkhead access panel

Attention: Usage examples only, validation of usage is under responsibility of the operator.

AVAILABLE ACCESSORIES

- Air powered pump
- Utilities package
- Extension
- Additional upper platform
- Fold-away tow-bars
- Lift truck fork pockets
- Levelling jacks

BENEFITS

- Flexible use on a wide range of wide-body aircraft
- Safety and reliability
- Unrivalled quality and durability
- Small footprint and greater geometry
- Rigorous inspection and testing

TECHNICAL SPECIFICATION

ENGINE ACCESS STAND

Model-No.	DF071554-07-08
Towing speed	10 KPH/ 6 MPH
Material type	Ladder: Aluminum Frame: Aluminum
Certifications	ANSI-ASC A14.7, BS EN 131.7
Shipping dimensions	2,235 mm x 1,270 mm x 3,124 mm 88 inch x 50 inch x 123 inch
Weight	476 kg 1,050 lbs
Height	Low: 3,211 mm, High: 4,658 mm Low: 126.4 inch, High: 183.4 inch
Foot print	2,235 mm x 3,124 mm 88 inch x 123 inch
Airbus applications	A300/ A310 **A319/ A320/ A321 (ceo and neo)** A330neo/ A330 ceo A340 A350 A380
Boeing applications	B717, B727, B747, B757, B767, B787
Other applications	Bombardier CRJ Embraer ERJ

14.7 HOLD-OPEN DEVICE - AIRBUS AIRFRAME TOOLS

DESCRIPTION

Hold-open device for cowling of the aircraft engine (fan cowl and thrust reverser).

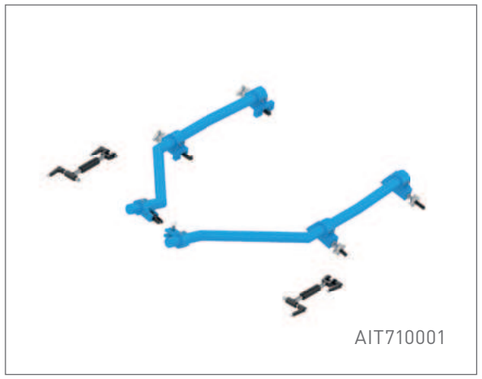
AIT710001

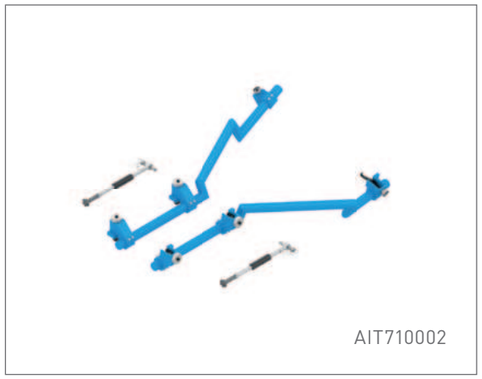
AIT710002

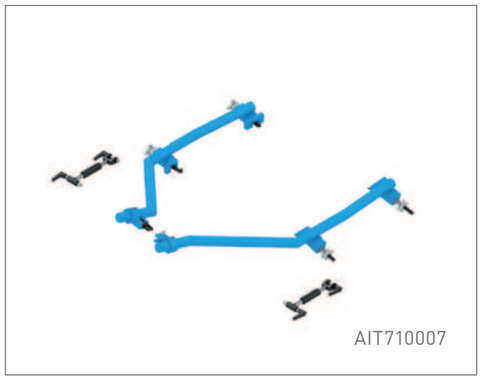
AIT710007

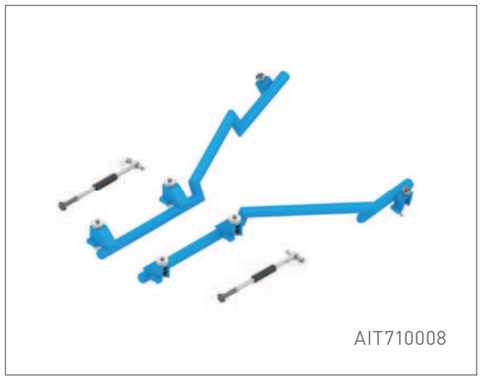
AIT710008

TECHNICAL SPECIFICATION

Model-No.	AIT710001	AIT710002	AIT710007	AIT710008
Aircraft application	A320 Family	A320 Family	A320 Family	A320 Family
Engine application	CFM56-5A / B	IAE V2500	CFM56-5A / B	IAE V2500
Version	Bolted version with adjustability	Bolted version with adjustability	Welded version	Welded version

14.8 ENGINE TOOLING

DESCRIPTION

Since 2007 HYDRO is a preferred supplier to Rolls-Royce for products and services relating to Engine Tooling and Ground Support Equipment. We provide our products and services to Rolls-Royce and its after-market customers.

OUR COPE OF SUPPLY

Products

- Build and strip tooling
- Line maintenance tooling
- Component repair tooling
- Electrical test equipment
- Moisture and vapor protection equipment
- Engine blanks
- Special to product test equipment (SPTE)
- Engine transportation stands
- Make to Print
- Design and make
- Repair and refurbishment
- Calibration

Hier brauchen wir auch noch eine Überschrift

http://www.satair.com/products/tools-and-gse

BENEFITS

- Extensive experience in tooling design and manu-facturing
- Outstanding quality and cost reduction by using HYDRO and its global supply chain
- Experienced project management, design and project engineering teams
- Well-proven tooling design process
- Extensive base of external suppliers for engineer-ing design services Specialized project engineers for balancing tooling, multi-product-tooling and value engineering
- Comprehensive knowledge in aero engine design and build and strip of engines
- We turn your tooling activities around into a profitmaking business!

TOOLING AVAILABLE FOR THE FOLLOWING ENGINE PROGRAM

Engine	Aircraft
Trent XWB	A350

HYDRO supports engine tools also for other engine programs, including Trent 1000, Trent 900, Trent 800, Trent 700 and many more.

14.8 AIRBUS TOOLING

DESCRIPTION

HYDRO has a long-standing business relationship with Airbus. All sales and material provisioning is done by Airbus/Satair exclusively. Contractually, HYDRO is thus allowed to sell Airbus proprietary tooling directly to the aftersales market and third parties.

Airbus propriety tooling is to be solely procured through Airbus/Satair. HYDRO has a specialized tooling sales team located in Seattle, USA.

Airbus / Satair tools procurement organization

http://www.satair.com/products/tools-and-gse

BENEFITS

- Short lead times
- Competitive pricing
- High quality products
- Global customer sales and service support

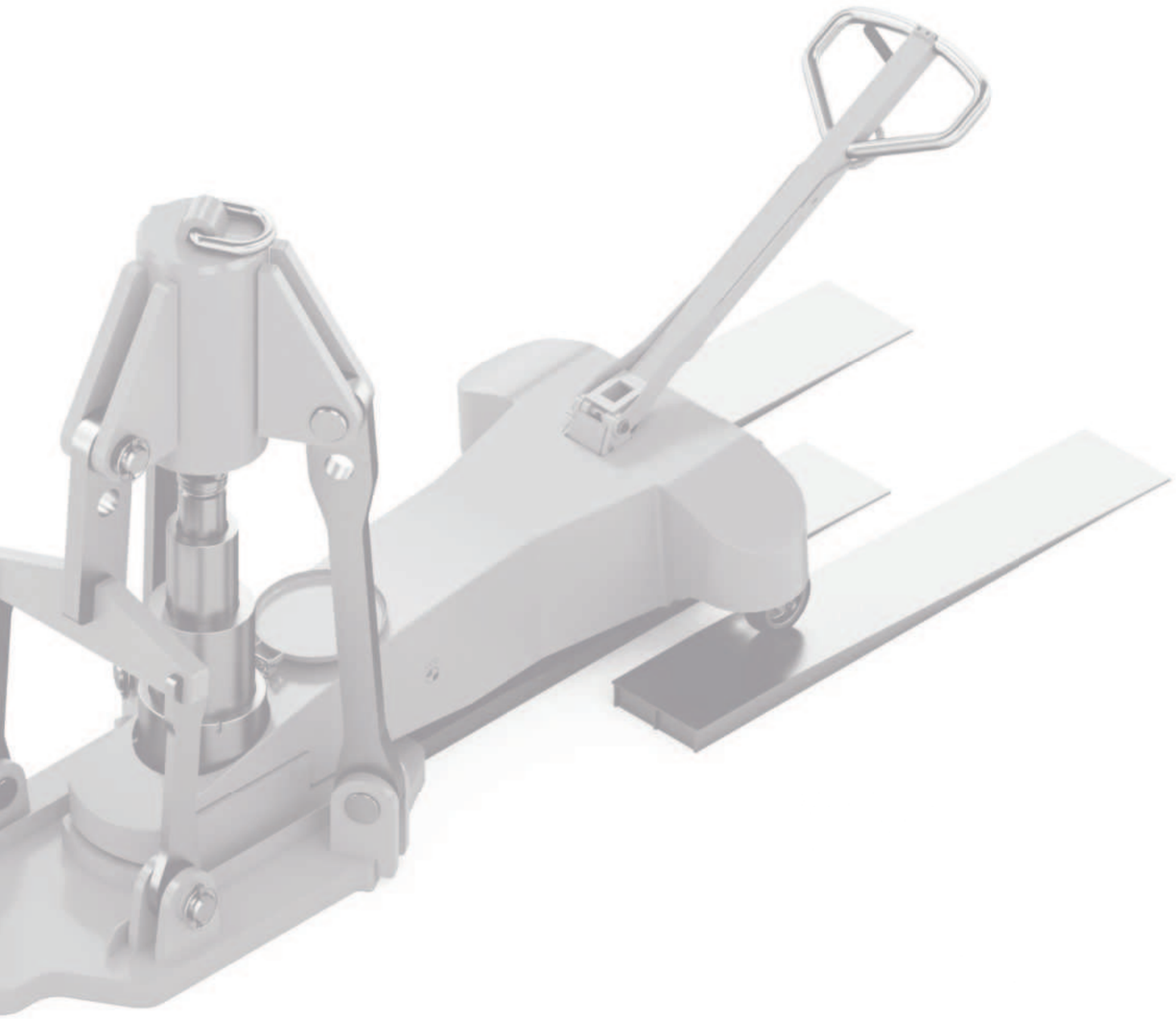

15

OTHERS

15 PROOF LOAD TEST FIXTURE

DESCRIPTION

The HYDRO proof load test fixture has been designed for testing of lifting devices.

The HYDRO proof load test fixtures are used for

- Checking: the hydraulic lift cylinder and hydraulic circuit of tripod- and axle-jacks for leakage
- Controlling: the preciseness of the load indicator of tripod- and axle-jacks testing: the adjustment of pressure relief valves of the hydraulic circuit of tripod- and axle-jacks

STANDARD CHARACTERISTICS OF PV165 AND PV250

- Load cell
- Adapter pieces (male ø 19 mm and ø 32 mm, female ø 44.5 mm)
- Laptop with testing software "HyCat" and case
- Color printer for test certificates with case
- Measuring cable
- Storage box
- Power supply AC 240 V / 0.04 kVA / 50 Hz

STANDARD CHARACTERISTICS OF PV050

- Hydraulic load cell (PV165 load cell also usable)
- Adapter pieces (male ø 19 mm and ø 32 mm)
- Storage box

AVAILABLE ACCESSORIES

- Individual braces for each tripod-jack
- Measuring amplifier and LED-display (instead of laptop with testing software)
- Special cradle designed to operate and ship PV165 in pre-installed position

BENEFITS

- User friendly ergonomic setup and operation
- Universal application
- On-site service

TECHNICAL SPECIFICATION
PROOF LOAD TEST FIXTURE

Model-No.	PV050	PV165	PV250
Max. test force	50 t 55.0 tons	165 t 181.5 tons	250 t 275.0 tons
Application	For all HYDRO tripod-jacks and axle-jacks with a test capacity up to 50 t	For all HYDRO tripod-jacks and axle-jacks with a test capacity up to 165 t	For all HYDRO tripod-jacks and axle-jacks with a test capacity up to 250 t